EANCOM® 2002 S3

IFTMIN

Instruction message

Edition 2016 Upd. 2021

1. Introduction 2
2. Message Structure Chart 4
3. Branching Diagram 6
4. Segments Description 13
5. Segments Layout 19
6. Example(s) 102

1. Introduction

Status

MESSAGE TYPE	: IFTMIN
REFERENCE DIRECTORY	: D.01B
EANCOM® SUBSET VERSION	: 004

Definition

A message from the party issuing an instruction regarding forwarding/transport services for a consignment under conditions agreed, to the party arranging the forwarding and/or transport services.

Principles

This message should not be used to instruct the despatch of products. The 'Instruction To Despatch (INSDES)' message should be used for this purpose.

The instruction results in a transport contract for one consignment and is primarily meant for administrative purposes. It will be the message from shipper to carrier or forwarder containing the final details of the consignment for which services are provided. The instruction message is the one and only message which results in the actual contract which can either be a document or an electronic contract.

If only one message will suffice in an exchange between a shipper and a carrier/forwarder to convey the information related to one consignment then the instruction message should be the one as this message is the only message for a single consignment message that results in a contract.

In addition to the main principles detailed above, a number of general principles also apply;

- A consignment may contain several goods items.
- A consignment is identified by a consignors reference number (code CU) in the RFF segment.
- Goods items may or may not be containerised.
- Goods items may be transported in one or more containers, and a single container may contain one or more goods items.
- One goods item may be related to one or more customs tariff codes.
- Goods items related to one customs tariff code may be carried in one or more containers.
- Goods items may reflect either the contractual or operational description of the goods.
- The instruction always relates to one consignee but may be for several different delivery locations.
- One transport instruction message should always equal one consignment.
- Pre-carriage (advanced haulage) and/or on-carriage (destination haulage) of goods items or equipment within one booking or instruction may take place in different steps, each step specified with its own transport details group.
- Transport devices, which have the ability of powered movement on their own, are specified in the transport details group. Other load or transport devices are specified as equipment.
- Packaging for goods items can be expressed at up to three levels.
- A goods item consists of one or more despatch units that adhere to the same package type and goods description.
- A despatch unit is the unit of cargo that will be handled and to which an SSCC can be affixed.

1. Introduction

A number of generic transport terms are used in this specification, to be described as:

CONSIGNEE
the organisation (party) which has the intention to receive the goods.

CONSIGNOR
the party ordering transport, orders a carrier to collect goods for transportation.

CONSIGNMENT
a collection of goods items to be transported from one or many despatch locations to one or many delivery locations. (synonym: shipment).

CARRIER
the party contracted by the consignor or forwarder to transport goods.

DESPATCH LOCATION
the physical location from which goods for transport are shipped.

DELIVERY LOCATION
the physical location to which goods for transport are finally delivered.

EQUIPMENT
material resources necessary to facilitate the transport and handling of cargo. Transport equipment does under the given circumstances not have the ability to move by its own propulsion (e.g. sea container, trailer, unit load device, pallet).

FORWARDER
the party contracted by the consignor to arrange to have the goods transported.

GOODS ITEM
a collection of products normally grouped together for transport purposes, e.g. 12 pallets of foodstuffs.

LINE ITEM
a specific product identified and defined for trade purposes, e.g. a case of flour containing 24 packets of 250 grams.

MODE OF TRANSPORT
the method of transport used for the conveyance of goods or persons, e.g. by rail, by road, by sea.

MEANS OF TRANSPORT
the vehicle used for the transport of goods or persons, e.g. aircraft, truck, vessel.

PLACE OF ACCEPTANCE
the place at which the responsibility of the carrier starts.

PLACE OF DELIVERY
the place at which the responsibility of the carrier ends.

TYPE OF MEANS OF TRANSPORT
the type of vehicle used in the transport process, e.g. wide body, tank truck, passenger vessel.

TYPE OF EQUIPMENT
the type of material used, e.g. 40 feet container, four way pallet, mafi trailer.

2. Message Structure Chart

EANCOM® 2002 S3 **Edition 2016 Upd. 2021** **Part II**
IFTMIN Instruction message

UNA		1	C	1	- Service string advice
UNB		2	M	1	- Interchange header

Transport Instruction Heading Section

UNH		3	M	1	- Message header
BGM		4	M	1	- Beginning of message
DTM		5	C	9	- Date/time/period
TSR		6	C	9	- Transport service requirements
MOA		7	C	99	- Monetary amount
FTX		8	C	99	- Free text
CNT		9	C	9	- Control total
SG2			C	2	- TOD-LOC
TOD		10	M	1	- Terms of delivery or transport
LOC		11	C	9	- Place/location identification
SG3			C	999	- RFF-DTM
RFF		12	M	1	- Reference
DTM		13	C	9	- Date/time/period
SG4	+		C	9	- GOR-DTM-LOC-SEL-FTX-SG5
GOR	+	14	M	1	- Governmental requirements
DTM	+	15	C	9	- Date/time/period
LOC	+	16	C	9	- Place/location identification
SEL	+	17	C	9	- Seal number
FTX	+	18	C	9	- Free text
SG5	+		C	9	- DOC-DTM
DOC	+	19	M	1	- Document/message details
DTM	+	20	C	1	- Date/time/period
SG8	*		C	99	- TDT-DTM-SG9-SG10
TDT		21	M	1	- Details of transport
DTM		22	C	9	- Date/time/period
SG9			C	99	- LOC-DTM
LOC		23	M	1	- Place/location identification
DTM	+	24	C	9	- Date/time/period
SG10	+		C	9	- RFF-DTM
RFF	+	25	M	1	- Reference
DTM	+	26	C	1	- Date/time/period
SG11	*		M	99	- NAD-LOC-MOA-SG12-SG13-SG15
NAD		27	M	1	- Name and address
LOC	+	28	C	9	- Place/location identification
MOA	+	29	C	9	- Monetary amount
SG12			C	9	- CTA-COM
CTA		30	M	1	- Contact information
COM		31	C	9	- Communication contact
SG13			C	9	- DOC-DTM
DOC		32	M	1	- Document/message details
DTM		33	C	1	- Date/time/period
SG15			C	9	- RFF-DTM
RFF		34	M	1	- Reference
DTM		35	C	9	- Date/time/period

Transport Instruction Detail Section

SG18	*		C	999	- GID-HAN-TMP-RNG-LOC-MOA-PIA-FTX-SG19-GDS-SG20-SG21-S
GID		36	M	1	- Goods item details
HAN		37	C	99	- Handling instructions
TMP		38	C	1	- Temperature
RNG		39	C	1	- Range details

2. Message Structure Chart

EANCOM® 2002 S3 **Edition 2016 Upd. 2021** **Part II**
IFTMIN Instruction message

LOC		40	C	9	- Place/location identification
MOA		41	C	9	- Monetary amount
PIA		42	C	9	- Additional product id
FTX		43	C	99	- Free text
SG19			C	9	- NAD-DTM
NAD		44	M	1	- Name and address
DTM		45	C	1	- Date/time/period
GDS	+	46	C	9	- Nature of cargo
SG20			C	99	- MEA-EQN
MEA		47	M	1	- Measurements
EQN		48	C	1	- Number of units
SG21			C	99	- DIM-EQN
DIM		49	M	1	- Dimensions
EQN		50	C	1	- Number of units
SG22			C	9	- RFF-DTM
RFF		51	M	1	- Reference
DTM		52	C	9	- Date/time/period
SG23			C	999	- PCI-GIN
PCI		53	M	1	- Package identification
GIN		54	C	10	- Goods identity number
SG24			C	9	- DOC-DTM
DOC		55	M	1	- Document/message details
DTM		56	C	9	- Date/time/period
SG29			C	999	- SGP
SGP		57	M	1	- Split goods placement
SG32			C	99	- DGS-FTX-SG33-SG34
DGS		58	M	1	- Dangerous goods
FTX		59	C	99	- Free text
SG33			C	9	- CTA-COM
CTA		60	M	1	- Contact information
COM		61	C	9	- Communication contact
SG34			C	9	- MEA-EQN
MEA		62	M	1	- Measurements
EQN		63	C	1	- Number of units
SG37			C	999	- EQD-EQN-MEA-DIM-SEL-SG39
EQD		64	M	1	- Equipment details
EQN		65	C	1	- Number of units
MEA		66	C	9	- Measurements
DIM		67	C	9	- Dimensions
SEL		68	C	99	- Seal number
SG39			C	9	- NAD-DTM
NAD		69	M	1	- Name and address
DTM		70	C	1	- Date/time/period

Transport Instruction Summary Section

UNT	71	M	1	- Message trailer
UNZ	72	M	1	- Interchange trailer

3. Branching Diagram

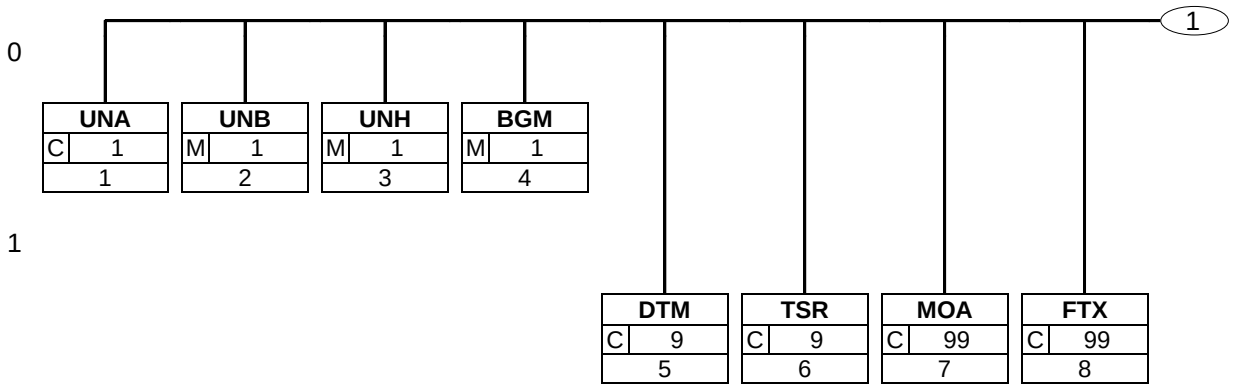

3. Branching Diagram

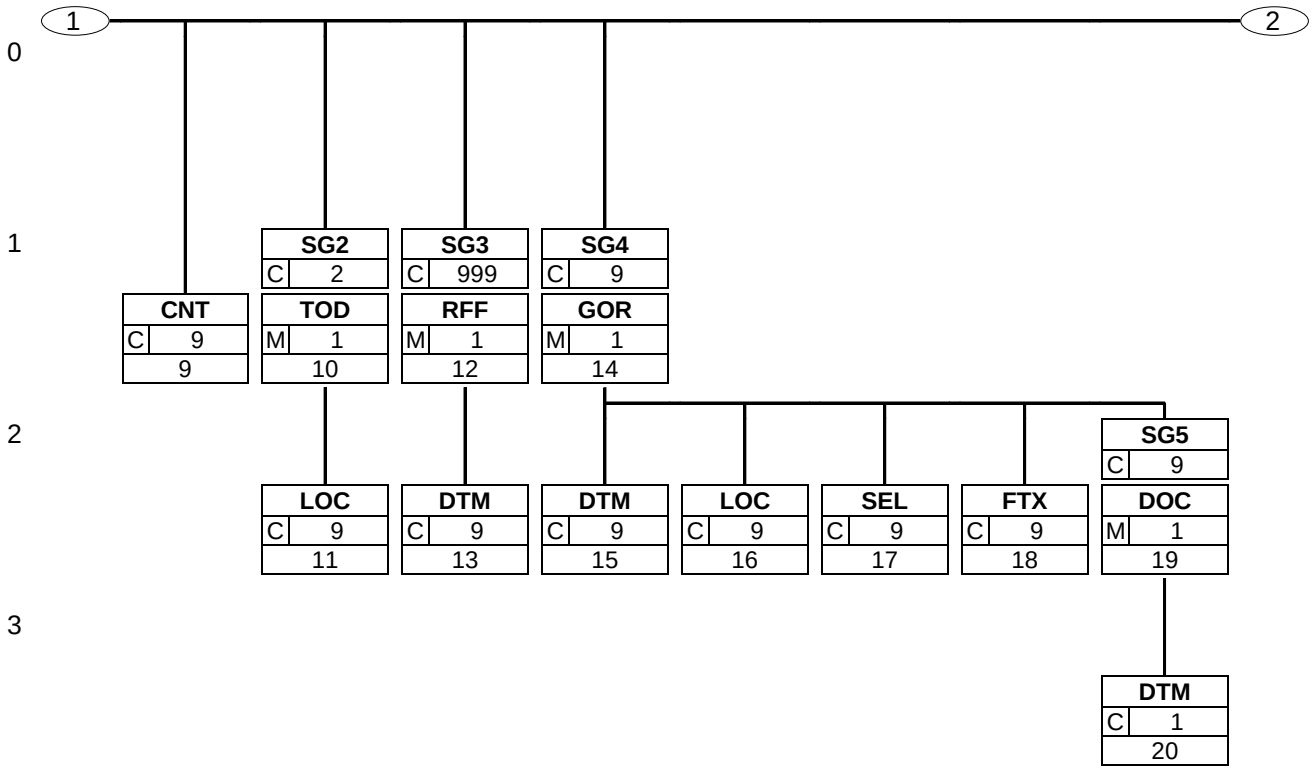

3. Branching Diagram

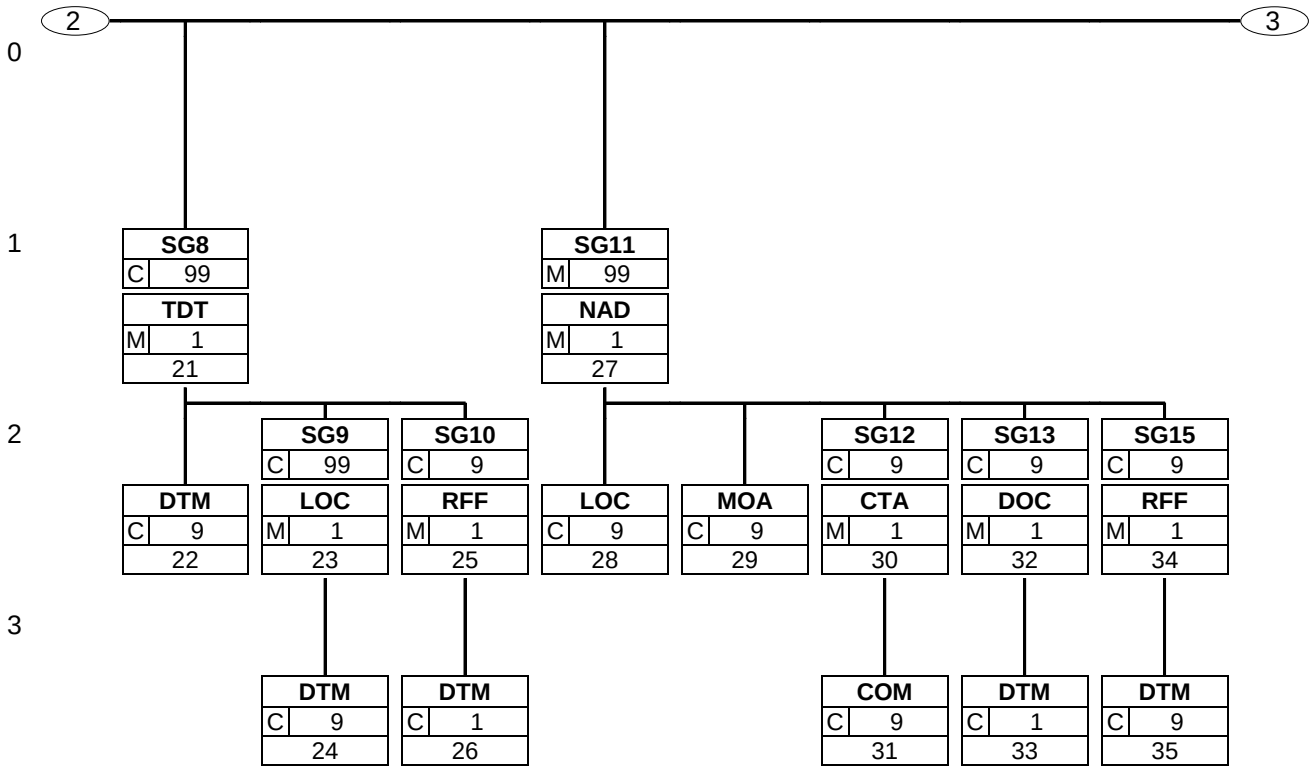

3. Branching Diagram

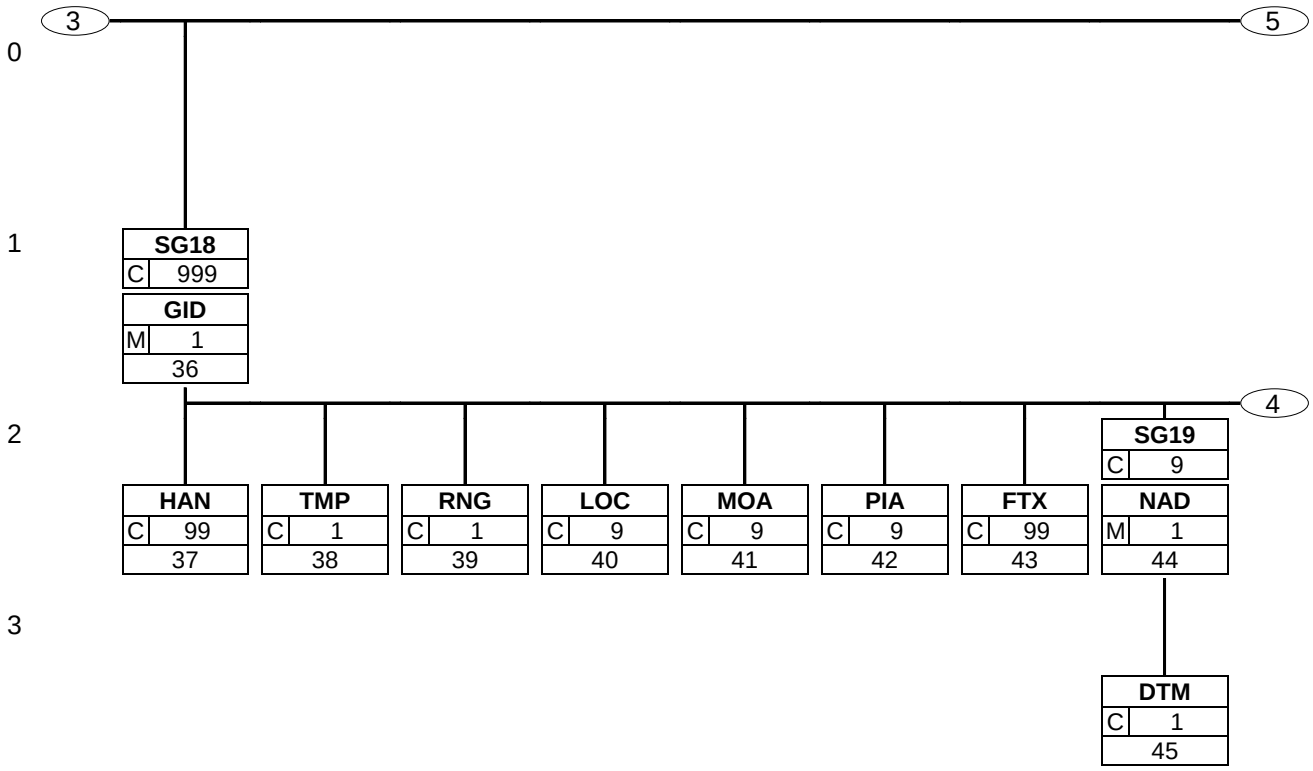

3. Branching Diagram

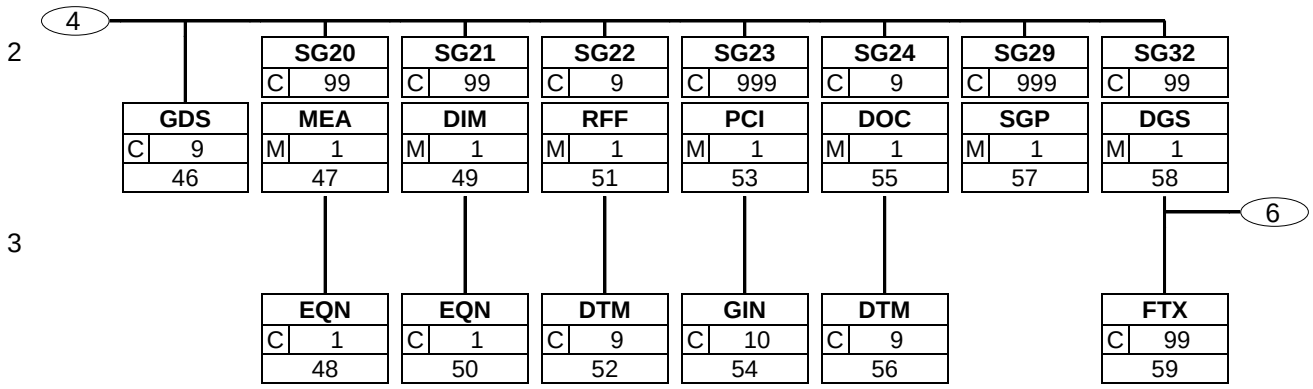

3. Branching Diagram

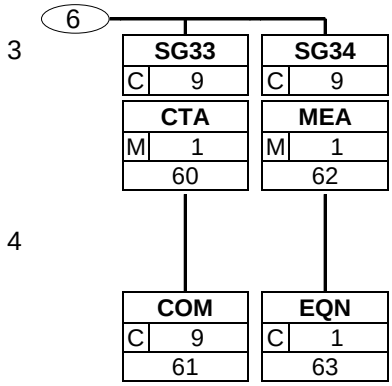

3. Branching Diagram

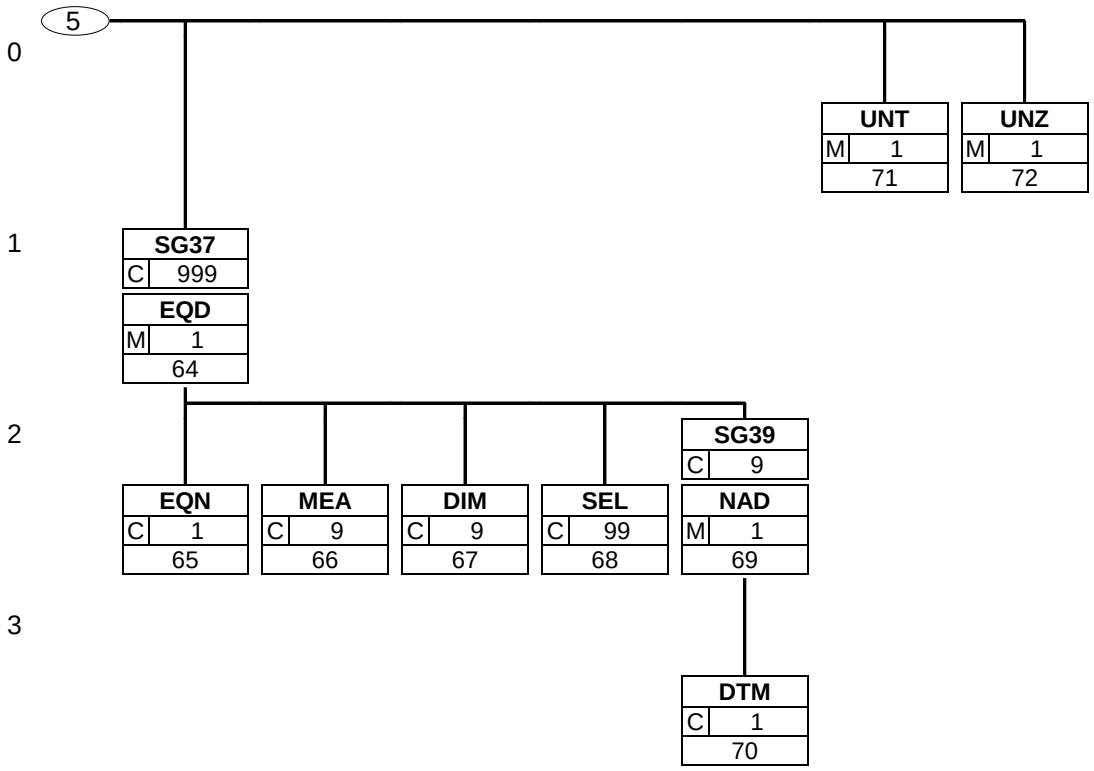

4. Segments Description

UNA - C 1 - Service string advice

The service string advice shall begin with the upper case characters UNA immediately followed by six characters in the order shown below. The same character shall not be used in more than one position of the UNA.

UNB - M 1 - Interchange header

This segment is used to envelope the interchange, as well as to identify both, the party to whom the interchange is sent and the party who has sent the interchange. The principle of the UNB segment is the same as a physical envelope which covers one or more letters or documents, and which details, both the address where delivery is to take place and the address from where the envelope has come.

Transport Instruction Heading Section

UNH - M 1 - Message header

This segment is used to head, identify and specify a message.

BGM - M 1 - Beginning of message

This segment is used to indicate the type and function of a message and to transmit the identifying number.

DTM - C 9 - Date/time/period

This segment is used to specify the date of the Transport Instruction message.

TSR - C 9 - Transport service requirements

This segment is used to indicate any special contracts, services, priorities or nature of cargo in relation to the transport.

MOA - C 99 - Monetary amount

This segment is used to specify insurance, customs or other values for the complete transport instruction message.

FTX - C 99 - Free text

This segment is used to provide free form or coded text information related to the entire message.

CNT - C 9 - Control total

This segment is used to provide message control information such as the total weight of the consignment, or, the total number of items in the consignment.

SG2 - C 2 - **TOD-LOC**

A group of segments to specify terms of delivery and related locations.

TOD - M 1 - Terms of delivery or transport

This segment is used to specify the terms of delivery for the transport instruction.

LOC - C 9 - Place/location identification

This segment is used to indicate the location to which the terms of delivery are applicable.

SG3 - C 999 - **RFF-DTM**

A group of segments containing a reference and constants which apply to the entire message.

RFF - M 1 - Reference

This segment is used to specify references related to the complete transport instruction message.

DTM - C 9 - Date/time/period

This segment is used to specify any dates related to the previous RFF segment.

SG4 - C 9 - **GOR-DTM-LOC-SEL-FTX-SG5**

A group of segments to identify customs and other governmental procedures and required documents.

4. Segments Description

GOR - M 1 - Governmental requirements

This segment is used to indicate any applicable governmental procedures and required action related to the import, export or transit of the entire consignment, e.g. arrangements to be made for the inspection of the goods by customs at the time of export.

DTM - C 9 - Date/time/period

This segment is used to specify any dates or periods related to governmental procedures and/or documents for the entire consignment, e.g. the expiration date of the customs documents.

LOC - C 9 - Place/location identification

This segment is used to identify any locations related to the governmental procedures for the entire consignment, e.g. the customs office at which the consignment leaves the country.

SEL - C 9 - Seal number

This segment is used to specify a seal number and the sealing party, for the entire consignment, e.g. the carrier being responsible for sealing the truck.

FTX - C 9 - Free text

This segment is used to specify additional information.

SG5 - C 9 - **DOC-DTM**

A group of segments to specify required documents by government.

DOC - M 1 - Document/message details

This segment is used to identify any documentation related to the entire consignment which is required by government, e.g. despatch note model T2 that ascertains that all goods of the consignment were originally produced in a country of the European Community.

DTM - C 1 - Date/time/period

This segment is used to specify any dates related to the previous DOC segment, e. g. date of the despatch note model T2.

SG8 - C 99 - **TDT-DTM-SG9-SG10**

A group of segments to indicate details of the movement of goods such as mode and means of transport, locations, departure, and arrival date(s) and time(s).

TDT - M 1 - Details of transport

This segment is used to indicate the transport means, and where necessary, the carrier to be used for the consignment for which a transport instruction is being issued. When used, it is mandatory to indicate the main carriage transport mode in this segment.

DTM - C 9 - Date/time/period

This segment is used to specify dates relating to the transport means.

SG9 - C 99 - **LOC-DTM**

A group of segments to specify a location and date/time related to this leg of transport.

LOC - M 1 - Place/location identification

This segment is used to identify locations relating to the transport details for the complete transport instruction.

DTM - C 9 - Date/time/period

This segment is used to specify any dates related to the location identified for a specific stage of transport.

SG10 - C 9 - **RFF-DTM**

A group of segments to specify an additional reference related to the stage of the transport.

4. Segments Description

RFF - M 1 - Reference

This segment is used to specify references related to the transport details for the complete transport instruction.

DTM - C 1 - Date/time/period

This segment is used to specify any dates related to the previous RFF segment.

SG11 - M 99 - **NAD-LOC-MOA-SG12-SG13-SG15**

A group of segments to identify a party, related references, locations contacts and required documents.

NAD - M 1 - Name and address

This segment is used to identify the trading partners involved in the Transport Instruction message. Identification of the Consignor and Carrier or Forwarder is mandatory in the Transport Instruction message. If required, a Consignee may also be identified using NAD at this level in the message.

LOC - C 9 - Place/location identification

This segment is used to identify locations related to the party specified in the NAD segment.

MOA - C 9 - Monetary amount

This segment is used to indicate monetary amounts for the party receiving the goods.

SG12 - C 9 - **CTA-COM**

A group of segments identifying a contact and its communications related to the party.

CTA - M 1 - Contact information

This segment is used to identify department and contact names within the party specified in the NAD segment.

COM - C 9 - Communication contact

This segment identifies the communications number and type of communications for the person or department identified in the previous CTA segment.

SG13 - C 9 - **DOC-DTM**

A group of segments to identify required documents.

DOC - M 1 - Document/message details

This segment is used to identify any documentation related to the party identified in the NAD segment which must accompany the consignment.

DTM - C 1 - Date/time/period

This segment is used to specify any dates related to the previous DOC segment.

SG15 - C 9 - **RFF-DTM**

A group of segments to specify a reference related to the party.

RFF - M 1 - Reference

This segment is used to provide references related to the party identified in the NAD segment.

DTM - C 9 - Date/time/period

This segment is used to specify dates relating to the references given in the previous RFF segment.

Transport Instruction Detail Section

SG18 - C 999 - **GID-HAN-TMP-RNG-LOC-MOA-PIA-FTX-SG19-GDS-SG20-SG21-SG22-SG23-SG24-SG29-SG32**

A group of segments to describe the goods items for which transport is undertaken.

4. Segments Description

GID - M 1 - Goods item details

This segment is the trigger segment for the detail section of the transport instruction message. It is used to specify the number and type of packaging for the goods item.

HAN - C 99 - Handling instructions

This segment is used to provide handling instructions relevant to the transport line item identified in the GID segment.

TMP - C 1 - Temperature

This segment is used to specify a temperature setting related to the current goods item.

RNG - C 1 - Range details

This segment is used to specify a temperature range related to the current goods item.

LOC - C 9 - Place/location identification

This segment is used to indicate locations relevant to the current goods item line.

MOA - C 9 - Monetary amount

This segment is used to specify the value of the goods item for customs, insurance or other valuation purposes.

PIA - C 9 - Additional product id

This segment is used to specify identification codes relating to the goods item for which a transport instruction is being issued.

FTX - C 99 - Free text

This segment is used to provide free form or coded text information related to the goods item.

SG19 - C 9 - **NAD-DTM**

A group of segments to identify different places of collection and/or delivery for the goods item.

NAD - M 1 - Name and address

This segment is used to identify parties related to the despatch and delivery of the current goods item. Information provided here will override similar information provided at the heading level (group 11) when the same qualifier is used.

DTM - C 1 - Date/time/period

This segment is used to specify dates and times relating to the despatch or delivery parties specified in the previous NAD segment.

GDS - C 9 - Nature of cargo

This segment is used to specify the exact nature of the goods.

SG20 - C 99 - **MEA-EQN**

A group of segments to specify measurements applicable to a goods item.

MEA - M 1 - Measurements

This segment is used to specify a measurement for the goods identified in the GID segment. All measurements given in the MEA segments relate to the highest level of packaging (the despatch units) identified in the GID segment.

EQN - C 1 - Number of units

This segment is used to specify the number of packages (despatch units) within the goods item to which the measurement applies.

SG21 - C 99 - **DIM-EQN**

A group of segments to specify dimensions applicable to a goods item.

4. Segments Description

DIM - M 1	- Dimensions	
		This segment is used to indicate the dimensions of the goods item identified in the GID segment. All dimensions given in the DIM segments relate to the highest level packaging (the despatch units) identified in the GID segment.
EQN - C 1	- Number of units	
		This segment is used to specify the number of packages (despatch units) within the goods items to which the dimensions apply.
SG22 - C 9	- **RFF-DTM**	
		A group of segments to identify references to a goods item.
RFF - M 1	- Reference	
		This segment is used to specify references which are applicable to the current goods item only.
DTM - C 9	- Date/time/period	
		This segment is used to indicate dates relevant to the references specified in the previous RFF segment.
SG23 - C 999	- **PCI-GIN**	
		A group of segments to specify marks and numbers of a goods item.
PCI - M 1	- Package identification	
		This segment is used to specify markings and labels which have been marked on the packaging of the current goods item.
GIN - C 10	- Goods identity number	
		This segment is used to provide the Serial Shipping Container Code marked on the packaging of the current goods item.
SG24 - C 9	- **DOC-DTM**	
		A group of segments to specify documents and associated date(s) and time(s) for a goods item.
DOC - M 1	- Document/message details	
		This segment is used to specify documents which are required for the current transport goods item only and which must accompany the consignment.
DTM - C 9	- Date/time/period	
		This segment is used to specify dates relating to the documents identified in the previous DOC segment.
SG29 - C 999	- **SGP**	
		A group of segments to specify the distribution of a goods item among the transport equipment.
SGP - M 1	- Split goods placement	
		This segment is used to specify the placement of the goods item in equipment used to transport the consignment.
SG32 - C 99	- **DGS-FTX-SG33-SG34**	
		A group of segments to specify dangerous goods details related to the goods item. One goods item may be in different dangerous goods classes.
DGS - M 1	- Dangerous goods	
		This segment is used to indicate whether the goods item contains any dangerous goods.
FTX - C 99	- Free text	
		This segment is used to specify any additional information required for the dangerous goods.

4. Segments Description

SG33 - C 9 - **CTA-COM**

A group of segments to identify a contact to whom communication regarding the dangerous goods can be directed.

CTA - M 1 - Contact information

This segment is used to specify a contact name relating to the dangerous goods identified in the DGS segment.

COM - C 9 - Communication contact

This segment identifies the communications number and type of communications for the person or department identified in the previous CTA segment.

SG34 - C 9 - **MEA-EQN**

A group of segments to identify dangerous goods measurements.

MEA - M 1 - Measurements

This segment is used to indicate a measurement of the dangerous goods in the goods line item.

EQN - C 1 - Number of units

This segment is used to indicate the number of units to which the dangerous goods measurements apply.

SG37 - C 999 - **EQD-EQN-MEA-DIM-SEL-SG39**

A group of segments to specify equipment in which goods are transported.

EQD - M 1 - Equipment details

This segment is used to indicate the units of equipment which will be used to transport the goods items.

EQN - C 1 - Number of units

This segment is used to specify the number of pieces of equipment required.

MEA - C 9 - Measurements

This segment is used to specify the physical dimensions including tolerances of the equipment identified in the preceding EQD segment.

DIM - C 9 - Dimensions

This segment is used to indicate the dimensions of the equipment identified in the EQD segment.

SEL - C 99 - Seal number

This segment is used to specify a seal number for the equipment identified in the EQD segment.

SG39 - C 9 - **NAD-DTM**

A group of segments to identify different equipment pick-up or drop-off places.

NAD - M 1 - Name and address

This segment is used to specify pick up or drop off parties for the equipment specified in the EQD segment.

DTM - C 1 - Date/time/period

This segment is used to provide dates related to the equipment specified in the EQD segment.

Transport Instruction Summary Section

UNT - M 1 - Message trailer

This segment is a mandatory UN/EDIFACT segment. It must always be the last segment in the message.

UNZ - M 1 - Interchange trailer

This segment is used to provide the trailer of an interchange.

5. Segments Layout

This section describes each segment used in the EANCOM® Transport instruction message. The original EDIFACT segment layout is listed. The appropriate comments relevant to the EANCOM® subset are indicated.

Notes:

1. The segments are presented in the sequence in which they appear in the message. The segment or segment group tag is followed by the (M)andatory / (C)onditional indicator, the maximum number of occurrences and the segment description.

2. Reading from left to right, in column one, the data element tags and descriptions are shown, followed by in the second column the EDIFACT status (M or C), the field format, and the picture of the data elements. These first pieces of information constitute the original EDIFACT segment layout.

   Following the EDIFACT information, EANCOM® specific information is provided in the third, fourth, and fifth columns. In the third column a status indicator for the use of (C)onditional EDIFACT data elements (see 2.1 through 2.3 below), in the fourth column the restricted indicator (see point 3 on the following page), and in the fifth column notes and code values used for specific data elements in the message.

2.1 (M)andatory data elements in EDIFACT segments retain their status in EANCOM®.

2.2 Additionally, there are five types of status for data elements with a (C)onditional EDIFACT status, whether for simple, component or composite data elements. These are listed below and can be identified when relevant by the following abbreviations:

- REQUIRED	**R**	Indicates that the entity is required and must be sent.
- ADVISED	**A**	Indicates that the entity is advised or recommended.
- DEPENDENT	**D**	Indicates that the entity must be sent in certain conditions, as defined by the relevant explanatory note.
- OPTIONAL	**O**	Indicates that the entity is optional and may be sent at the discretion of the user.
- NOT USED	**N**	Indicates that the entity is not used and should be omitted.

2.3 If a composite is flagged as **N, NOT USED**, all data elements within that composite will have blank status indicators assigned to them.

3. Status indicators detailed in the fourth column which directly relate to the code values detailed in the fifth **column** may have two values:

- RESTRICTED	*****	A data element marked with an asterisk (*) in the fourth column indicates that the listed codes in column five are the only codes available for use with this data element, in this segment, in this message.
- OPEN		All data elements where coded representation of data is possible and a restricted set of code values is not indicated are open (no asterisk in fourth column). The available codes are listed in the EANCOM® Data Elements and Code Sets Directory. Code values may be given as examples or there may be a note on the format or type of code to be used.

4. Different colours are used for the code values in the segment details: restricted codes are in red and open codes in blue.

5. Segments Layout

Segment number: 1

UNA	- C	1 - Service string advice			
Function: To define the characters selected for use as delimiters and indicators in the rest of the interchange that follows.					
		EDIFACT	GS1	*	Description
UNA1	Component data element separator	M an1	**M**	*	Used as a separator between component data elements contained within a composite data element (default value: ":")
UNA2	Data element separator	M an1	**M**	*	Used to separate two simple or composite data elements (default value: "+")
UNA3	Decimal notation	M an1	**M**	*	Used to indicate the character used for decimal notation (default value:".")
UNA4	Release indicator	M an1	**M**	*	Used to restore any service character to its original specification (value: "?").
UNA5	Reserved for future use	M an1	**M**	*	(default value: space)
UNA6	Segment terminator	M an1	**M**	*	Used to indicate the end of segment data (default value: " ' ")

Segment Notes:

The service string advice shall begin with the upper case characters UNA immediately followed by six characters in the order shown below. The same character shall not be used in more than one position of the UNA.
This segment is used to inform the receiver of the interchange that a set of service string characters which are different to the default characters are being used.
When using the default set of service characters, the UNA segment need not be sent. If it is sent, it must immediately precede the UNB segment and contain the four service string characters (positions UNA1, UNA2, UNA4 and UNA6) selected by the interchange sender.
Regardless of whether or not all of the service string characters are being changed every data element within this segment must be filled, (i.e., if some default values are being used with user defined ones, both the default and user defined values must be specified).
When expressing the service string characters in the UNA segment, it is not necessary to include any element separators.
The use of the UNA segment is required when using a character set other than level A.
UNA:+.? '

5. Segments Layout

Segment number: 2

UNB - M 1 - Interchange header					
Function: To start, identify and specify an interchange.					
		EDIFACT	GS1	*	Description
S001	SYNTAX IDENTIFIER	M	**M**		See Part I chapter 5.2.7 and segment notes.
0001	Syntax identifier	M a4	**M**	*	UNOA = UN/ECE level A UNOB = UN/ECE level B UNOC = UN/ECE level C UNOD = UN/ECE level D UNOE = UN/ECE level E UNOF = UN/ECE level F
0002	Syntax version number	M n1	**M**	*	3 = Version 3
S002	INTERCHANGE SENDER	M	**M**		
0004	Sender identification	M an..35	**M**		GLN (n13)
0007	Partner identification code qualifier	C an..4	**R**	*	14 = GS1
0008	Address for reverse routing	C an..14	**O**		
S003	INTERCHANGE RECIPIENT	M	**M**		
0010	Recipient identification	M an..35	**M**		GLN (n13)
0007	Partner identification code qualifier	C an..4	**R**	*	14 = GS1
0014	Routing address	C an..14	**O**		
S004	DATE/TIME OF PREPARATION	M	**M**		
0017	Date of preparation	M n6	**M**		YYMMDD
0019	Time of preparation	M n4	**M**		HHMM
0020	Interchange control reference	M an..14	**M**		Unique reference identifying the interchange. Created by the interchange sender.
S005	RECIPIENT'S REFERENCE, PASSWORD	C	**O**		
0022	Recipient's reference/ password	M an..14	**M**		
0025	Recipient's reference/ password qualifier	C an2	**O**		
0026	Application reference	C an..14	**O**		Message identification if the interchange contains only one type of message.
0029	Processing priority code	C a1	**O**		A = Highest priority
0031	Acknowledgement request	C n1	**O**		1 = Requested
0032	Communications agreement ID	C an..35	**O**	*	EANCOM.....
0035	Test indicator	C n1	**O**		1 = Interchange is a test
Segment Notes: This segment is used to envelope the interchange, as well as to identify both, the party to whom the interchange is sent and the party who has sent the interchange. The principle of the UNB segment is the same as a physical envelope which covers one or more letters or documents, and which details, both the address where delivery is to take place and the address from where the envelope has come.					

5. Segments Layout

Segment number: 2

S001: The character encoding specified in basic code table of ISO/IEC 646 (7-bit coded character set for information interchange) shall be used for the interchange service string advice (if used) and up to and including the composite data element S001 'Syntax identifier' in the interchange header. The character repertoire used for the characters in an interchange shall be identified from the code value of data element 0001 in S001 'Syntax identifier' in the interchange header. The character repertoire identified does not apply to objects and/or encrypted data.
The default encoding technique for a particular repertoire shall be the encoding technique defined by its associated character set specification.
DE 0001: The recommended (default) character set for use in EANCOM® for international exchanges is character set A (UNOA). Should users wish to use character sets other than A, an agreement on which set to use should be reached on a bilateral basis before communications begin.
DE 0004, 0008, 0010, 0014, 0042 and 0046: Within EANCOM® the use of the Global Location Number (GLN) is recommended for the identification of the interchange sender and recipient.
DE 0008: Identification (e.g. a division) specified by the sender of the interchange, to be included if agreed, by the recipient in response interchanges, to facilitate internal routing.
DE 0042: Sub-level of sender internal identification, when further sub-level identification is required.
DE 0014: The address for routing, provided beforehand by the interchange recipient, is used by the interchange sender to inform the recipient of the internal address, within the latter's systems, to which the interchange should be routed. It is recommended that the GLN be used for this purpose.
DE 0007: Identification (e.g. a division) specified by the recipient of the interchange, to be included if agreed, by the sender in response interchanges, to facilitate internal routing.
DE 0046: Sub-level of recipient internal identification, when further sub-level identification is required.
DE S004: The date and time specified in this composite should be the date and time at which the interchange sender prepared the interchange. This date and time may not necessarily be the same as the date and time of contained messages.
DE 0020: The interchange control reference number is generated by the interchange sender and is used to identify uniquely each interchange. Should the interchange sender wish to re-use interchange control reference numbers, it is recommended that each number be preserved for at least a period of three months before being re-used. In order to guarantee uniqueness, the interchange control reference number should always be linked to the interchange sender's identification (DE 0004).
DE S005: The use of passwords must first be agreed bilaterally by the parties exchanging the interchange.
DE 0026: This data element is used to identify the application, on the interchange recipient's system, to which the interchange is directed. This data element may only be used if the interchange contains only one type of message, (e.g. only invoices). The reference used in this data element is assigned by the interchange sender.
DE 0031: This data element is used to indicate whether an acknowledgement to the interchange is required. The EANCOM® APERAK or CONTRL message should be used to provide acknowledgement of interchange receipt. In addition, the EANCOM® CONTRL message may be used to indicate when an interchange has been rejected due to syntax errors.
DE 0032: This data element is used to identify any underlying agreements which control the exchange of data. Within EANCOM® , the identity of such agreements must start with the letters 'EANCOM', the remaining characters within the data element being filled according to bilateral agreements.

```
UNB+UNOA:3+5412345678908:14+8798765432106:14+020102:1000+12345555+++++EANCOMREF 52'
```

5. Segments Layout

Segment number: 3

UNH	- M	1 - Message header			
Function: To head, identify and specify a message.					
		EDIFACT	GS1	*	Description
0062	Message reference number	M an..14	**M**		Senders unique message reference. Sequence number of the messages in the interchange. DE 0062 in the UNT will be identical. Sender generated, e.g. ME000001.
S009	MESSAGE IDENTIFIER	M	**M**		
0065	Message type	M an..6	**M**	*	IFTMIN = Instruction message
0052	Message version number	M an..3	**M**	*	D = Draft version/UN/EDIFACT Directory
0054	Message release number	M an..3	**M**	*	01B = Release 2001 - B
0051	Controlling agency	M an..2	**M**	*	UN = UN/CEFACT
0057	Association assigned code	C an..6	**R**	*	EAN004 = GS1 version control number (GS1 Permanent Code) Indicates that the message is the EANCOM version 004 of the UNSM Transport Instruction.
0068	Common access reference	C an..35	**N**		
S010	STATUS OF THE TRANSFER	C	**N**		
0070	Sequence of transfers	M n..2			
0073	First and last transfer	C a1			

Segment Notes:

This segment is used to head, identify and specify a message.
DE's 0065, 0052, 0054, and 0051: Indicate that the message is a UNSM Transport Instruction message based on the D.01B directory under the control of the United Nations.

Example:
UNH+ME000001+IFTMIN:D:01B:UN:EAN004'

5. Segments Layout

Segment number: 4

BGM - M 1 - Beginning of message					
Function: To indicate the type and function of a message and to transmit the identifying number.					
		EDIFACT	GS1	*	Description
C002	DOCUMENT/MESSAGE NAME	C	**R**		
1001	Document name code	C an..3	**R**	*	340 = Shipping instructions 341 = Shipper's letter of instructions (air) 610 = Forwarding instructions
1131	Code list identification code	C an..17	**N**		
3055	Code list responsible agency code	C an..3	**N**		
1000	Document name	C an..35	**O**		
C106	DOCUMENT/MESSAGE IDENTIFICATION	C	**R**		
1004	Document identifier	C an..35	**R**		Transport Instruction number assigned by The document sender. For global unique identification of documents Global Document Type Identifier (GDTI) is available.
1056	Version identifier	C an..9	**N**		
1060	Revision identifier	C an..6	**N**		
1225	Message function code	C an..3	**R**	*	1 = Cancellation 5 = Replace 7 = Duplicate 9 = Original 31 = Copy 42 = Confirmation via specific means The message function, coded is a critical data element in this segment. It applies to all data indicated in the message. Consequently, one separate message has to be provided per type of function required. The following definitions apply for the restricted codes: 1 = Cancellation - Cancel the original transport instruction message (original transport instruction reference specified in RFF SG3). When a transport instruction message is being cancelled all mandatory data (at message and detail levels) must be sent again for the message being cancelled which is identified using the RFF segment in group 3. 5 = Replace - Cancel the original transport instruction message and replace with this transport instruction message (original transport instruction reference is specified in RFF SG3). When a transport instruction message is being replaced all data pertaining to the consignment must be sent again for the message being replaced which is identified using the RFF segment in group 3. 7 = Duplicate - Re-transmission on the request of the receiver. 9 = Original - Original transmission of the transport instruction message. 31 = Copy - Copy of the transport instruction message for a third party for information purposes.

5. Segments Layout

Segment number: 4

	EDIFACT	GS1	*	Description
				42 = Confirmation via other means - Confirmation of a previous instruction sent by means other than EDI.
4343 Response type code	C an..3	**N**		

Segment Notes:

This segment is used to indicate the type and function of a message and to transmit the identifying number.
All references other than the document number DE 1004 are to be put in the RFF segment.

Example:
BGM+610+569952+9'

5. Segments Layout

Segment number: 5

DTM	- C	9 - Date/time/period			
Function: To specify date, and/or time, or period.					
		EDIFACT	GS1	*	Description
C507	DATE/TIME/PERIOD	M	**M**		
2005	Date or time or period function code qualifier	M an..3	**M**	*	2 = Delivery date/time, requested 10 = Shipment date/time, requested 63 = Delivery date/time, latest 64 = Delivery date/time, earliest 137 = Document/message date/time 175 = Advise before date/time 179 = Booking date/time 200 = Pick-up/collection date/time of cargo 234 = Collection date/time, earliest 235 = Collection date/time, latest 351 = Inspection date 530 = Fumigation date and/or time
2380	Date or time or period value	C an..35	**R**		
2379	Date or time or period format code	C an..3	**R**		102 = CCYYMMDD 203 = CCYYMMDDHHMM 719 = CCYYMMDDHHMM-CCYYMMDDHHMM

Segment Notes:

This segment is used to specify the date of the Transport Instruction message.
DE 2005: Identification of the 'Document/message date/time' (code value 137) is mandatory in an EANCOM message.

Example:
DTM+137:20021201:102'

5. Segments Layout

Segment number: 6

TSR	- C	9 - Transport service requirements			
Function: To specify the contract and carriage conditions and service and priority requirements for the transport.					
		EDIFACT	GS1	*	Description
C536	CONTRACT AND CARRIAGE CONDITION	C	**O**		
4065	Contract and carriage condition code	M an..3	**M**		2 = Special agreement for parcels transport 3 = Special agreement for full loading transport 4 = Combined transport 5 = FIATA combined transport bill of lading 11 = CMR carnet
1131	Code list identification code	C an..17	**O**		
3055	Code list responsible agency code	C an..3	**D**		
C233	SERVICE	C	**O**		
7273	Service requirement code	M an..3	**M**		1 = Carrier loads 4 = Shipper loads
1131	Code list identification code	C an..17	**O**		
3055	Code list responsible agency code	C an..3	**D**		
7273	Service requirement code	C an..3	**O**		
1131	Code list identification code	C an..17	**O**		
3055	Code list responsible agency code	C an..3	**D**		
C537	TRANSPORT PRIORITY	C	**O**		
4219	Transport service priority code	M an..3	**M**		1 = Express 2 = High speed 3 = Normal speed
1131	Code list identification code	C an..17	**O**		
3055	Code list responsible agency code	C an..3	**D**		
C703	NATURE OF CARGO	C	**O**		
7085	Cargo type classification code	M an..3	**M**		11 = Hazardous cargo 12 = General cargo
1131	Code list identification code	C an..17	**O**		
3055	Code list responsible agency code	C an..3	**D**		

Segment Notes:

This segment is used to indicate any special contracts, services, priorities or nature of cargo in relation to the transport.

Example:
TSR+3+1'

5. Segments Layout

Segment number: 7

MOA	- C	99 - Monetary amount			
Function: To specify a monetary amount.					
		EDIFACT	GS1	*	Description
C516	MONETARY AMOUNT	M	**M**		
5025	Monetary amount type code qualifier	M an..3	**M**		22 = Cash on delivery amount 40 = Customs value 44 = Declared value for carriage 157 = Insurance value
5004	Monetary amount	C n..35	**R**		
6345	Currency identification code	C an..3	**O**		
6343	Currency type code qualifier	C an..3	**N**		
4405	Status description code	C an..3	**N**		

Segment Notes:

This segment is used to specify insurance, customs or other values for the complete transport instruction message.

Example:
MOA+157:62112'

5. Segments Layout

Segment number: 8

FTX	- C	99 - Free text			
Function: To provide free form or coded text information.					
		EDIFACT	GS1	*	Description
4451	Text subject code qualifier	M an..3	**M**		AAI = General information BLR = Transport document remarks DEL = Delivery information HAN = Handling instructions PRD = Product information SIN = Special instructions ZZZ = Mutually defined
4453	Free text function code	C an..3	**O**		1 = Text for subsequent use
C107	TEXT REFERENCE	C	**D**		This composite is only used when trading partners have agreed to use mutually defined code values.
4441	Free text value code	M an..17	**M**		
1131	Code list identification code	C an..17	**O**		
3055	Code list responsible agency code	C an..3	**D**		91 = Assigned by supplier or supplier's agent 92 = Assigned by buyer or buyer's agent
C108	TEXT LITERAL	C	**D**		This composite is only used if coded text can not be used.
4440	Free text value	M an..512	**M**		
4440	Free text value	C an..512	**O**		
4440	Free text value	C an..512	**O**		
4440	Free text value	C an..512	**O**		
4440	Free text value	C an..512	**O**		
3453	Language name code	C an..3	**D**		ISO 639 two alpha code This data element is only used when non coded free text has been provided in data element C108.
4447	Free text format code	C an..3	**N**		

Segment Notes:

This segment is used to provide free form or coded text information related to the entire message.
Use of this segment in free form is not recommended since it may inhibit automatic processing of the Transport Instruction. Coded references to standard texts is an available functionality which enables automatic processing and reduces transmission overheads. Standard texts should be mutually defined between trading partners and can be used to cover legal or other requirements.

Example:
FTX+DEL+1+002::91'
(Supplier assigned Code value 002 = Please ensure complete delivery on requested date.)

5. Segments Layout

Segment number: 9

CNT - C 9 - Control total					
Function: To provide control total.					
		EDIFACT	GS1	*	Description
C270	CONTROL	M	**M**		
6069	Control total type code qualifier	M an..3	**M**		7 = Total gross weight 11 = Total number of packages 15 = Total consignment, cube 16 = Total number of equipment When using value '15' in this data element the total specified in data element 6066 is arrived at by adding the values specified in data element 6314 of the MEA segment at goods item level when the GMC (Gross measurement cube) code is used in data element 6313 in the same MEA segment. When using code value '11' the total specified in data element 6066 is arrived at by adding the values specified only in the first occurrence of C213, data element 7224, of the GID segment.
6066	Control total value	M n..18	**M**		
6411	Measurement unit code	C an..3	**O**		

Segment Notes:

This segment is used to provide message control information such as the total weight of the consignment, or, the total number of items in the consignment.

Example:
CNT+11:4'

5. Segments Layout

Segment number: 10

SG2	- C	2 -	TOD-LOC
TOD	- M	1 -	Terms of delivery or transport

Function:

To specify terms of delivery or transport.

		EDIFACT	GS1	*	Description
4055	Delivery or transport terms function code	C an..3	**R**		6 = Delivery condition
4215	Transport charges payment method code	C an..3	**O**		CC = Collect PP = Prepaid (by seller)
C100	TERMS OF DELIVERY OR TRANSPORT	C	**R**		
4053	Delivery or transport terms description code	C an..3	**R**		
1131	Code list identification code	C an..17	**O**		
3055	Code list responsible agency code	C an..3	**D**		
4052	Delivery or transport terms description	C an..70	**O**		
4052	Delivery or transport terms description	C an..70	**O**		

Segment Notes:

This segment is used to specify the terms of delivery for the transport instruction.

Example:
TOD+6++CFR:2E:9'

Dependency Notes:
Data elements 1131 and 3055 are only used if specific terms of delivery codesare being used.

5. Segments Layout

Segment number: 11

SG2	- C	2 -	TOD-LOC
LOC	- C	9 -	Place/location identification

Function:

To identify a place or a location and/or related locations.

		EDIFACT	GS1	*	Description
3227	Location function code qualifier	M an..3	**M**	*	1 = Place of terms of delivery
C517	LOCATION IDENTIFICATION	C	**A**		
3225	Location name code	C an..25	**A**		The use of UN/LOCODES is the most appropriate means of identifying locations related to the terms of delivery.
1131	Code list identification code	C an..17	**O**		
3055	Code list responsible agency code	C an..3	**D**		3 = IATA (International Air Transport Association) DE 3055 must be used if DE 3225 is used and does not contain an UN/LOCODE.
3224	Location name	C an..256	**O**		
C519	RELATED LOCATION ONE IDENTIFICATION	C	**N**		
3223	First related location name code	C an..25			
1131	Code list identification code	C an..17			
3055	Code list responsible agency code	C an..3			
3222	First related location name	C an..70			
C553	RELATED LOCATION TWO IDENTIFICATION	C	**N**		
3233	Second related location name code	C an..25			
1131	Code list identification code	C an..17			
3055	Code list responsible agency code	C an..3			
3232	Second related location name	C an..70			
5479	Relation code	C an..3	**N**		

Segment Notes:

This segment is used to indicate the location to which the terms of delivery are applicable.

Example:
LOC+1+BE-BRU'

5. Segments Layout

Segment number: 12

SG3	- C	999	-	RFF-DTM
RFF	- M	1	-	Reference

Function:

To specify a reference.

		EDIFACT	GS1	*	Description
C506	REFERENCE	M	**M**		
1153	Reference code qualifier	M an..3	**M**		AWB = Air waybill number BN = Booking reference number CT = Contract number CU = Consignor's reference number HWB = House waybill number LC = Letter of credit number MWB = Master air waybill number TIN = Transport instruction number Code value 'TRI' is only used when codes values 1 (Cancellation) or 5 (Replacement) are used in data element 1225 of the BGM segment. The code value 'CU' is the common reference number for the consignment which is used in all transport messages (IFTMBF, IFTMIN, IFTMAN, etc).
1154	Reference identifier	C an..70	**R**		
1156	Document line identifier	C an..6	**N**		
4000	Reference version identifier	C an..35	**N**		
1060	Revision identifier	C an..6	**N**		

Segment Notes:

This segment is used to specify references related to the complete transport instruction message.

Example:
RFF+CT:76214'

5. Segments Layout

Segment number: 13

SG3	- C	999	-	RFF-DTM
DTM	- C	9	-	Date/time/period

Function:

To specify date, and/or time, or period.

		EDIFACT	GS1	*	Description
C507	DATE/TIME/PERIOD	M	**M**		
2005	Date or time or period function code qualifier	M an..3	**M**	*	171 = Reference date/time
2380	Date or time or period value	C an..35	**R**		
2379	Date or time or period format code	C an..3	**R**		102 = CCYYMMDD 203 = CCYYMMDDHHMM 718 = CCYYMMDD-CCYYMMDD

Segment Notes:

This segment is used to specify any dates related to the previous RFF segment.

Example:
DTM+171:20021125:102'

5. Segments Layout

Segment number: 14

SG4	- C	9 -	GOR-DTM-LOC-SEL-FTX-SG5
GOR	- M	1 -	Governmental requirements

Function:

To indicate the requirement for a specific governmental action and/or procedure or which specific procedure is valid for a specific part of the transport.

		EDIFACT	GS1	*	Description
8323	Transport movement code	C an..3	**O**		1 = Export 2 = Import 3 = Transit
C232	GOVERNMENT ACTION	C	**R**		
9415	Government agency identification code	C an..3	**R**		5 = Customs 7 = Health certificate 10 = Live animals
9411	Government involvement code	C an..3	**O**		6 = Required
9417	Government action code	C an..3	**N**		
9353	Government procedure code	C an..3	**O**		1 = Already customs cleared in the importing country 2 = Documents requirements completed 5 = Inspection arrangements required
C232	GOVERNMENT ACTION	C	**O**		
9415	Government agency identification code	C an..3	**R**		
9411	Government involvement code	C an..3	**O**		
9417	Government action code	C an..3	**N**		
9353	Government procedure code	C an..3	**O**		
C232	GOVERNMENT ACTION	C	**O**		
9415	Government agency identification code	C an..3	**R**		
9411	Government involvement code	C an..3	**O**		
9417	Government action code	C an..3	**N**		
9353	Government procedure code	C an..3	**O**		
C232	GOVERNMENT ACTION	C	**O**		
9415	Government agency identification code	C an..3	**R**		
9411	Government involvement code	C an..3	**O**		
9417	Government action code	C an..3	**N**		
9353	Government procedure code	C an..3	**O**		

Segment Notes:

This segment is used to indicate any applicable governmental procedures and required action related to the import, export or transit of the entire consignment, e.g. arrangements to be made for the inspection of the goods by customs at the time of export.

Example:
GOR+1+5:6::5'

5. Segments Layout

Segment number: 15

SG4	- C	9 -	GOR-DTM-LOC-SEL-FTX-SG5
DTM	- C	9 -	Date/time/period

Function:

To specify date, and/or time, or period.

		EDIFACT	GS1	*	Description
C507	DATE/TIME/PERIOD	M	**M**		
2005	Date or time or period function code qualifier	M an..3	**M**		182 = Issue date 192 = Expiration date/time of customs document
2380	Date or time or period value	C an..35	**R**		
2379	Date or time or period format code	C an..3	**R**		102 = CCYYMMDD

Segment Notes:

This segment is used to specify any dates or periods related to governmental procedures and/or documents for the entire consignment, e.g. the expiration date of the customs documents.

Example:
DTM+192:20020605:102'

5. Segments Layout

Segment number: 16

SG4	- C	9 -	GOR-DTM-LOC-SEL-FTX-SG5
LOC	- C	9 -	Place/location identification

Function:

To identify a place or a location and/or related locations.

		EDIFACT	GS1	*	Description
3227	Location function code qualifier	M an..3	**M**		42 = Customs office of exit 45 = Customs office of destination (transit)
C517	LOCATION IDENTIFICATION	C	**A**		
3225	Location name code	C an..25	**A**		UN/LOCODE
1131	Code list identification code	C an..17	**O**		
3055	Code list responsible agency code	C an..3	**D**		3 = IATA (International Air Transport Association) 9 = GS1 DE 3055 must be used if DE 3225 is used and does not contain an UN/LOCODE.
3224	Location name	C an..256	**O**		
C519	RELATED LOCATION ONE IDENTIFICATION	C	**N**		
3223	First related location name code	C an..25			
1131	Code list identification code	C an..17			
3055	Code list responsible agency code	C an..3			
3222	First related location name	C an..70			
C553	RELATED LOCATION TWO IDENTIFICATION	C	**N**		
3233	Second related location name code	C an..25			
1131	Code list identification code	C an..17			
3055	Code list responsible agency code	C an..3			
3232	Second related location name	C an..70			
5479	Relation code	C an..3	**N**		

Segment Notes:

This segment is used to identify any locations related to the governmental procedures for the entire consignment, e.g. the customs office at which the consignment leaves the country.

Example:
LOC+42+BE-BRU'

5. Segments Layout

Segment number: 17

SG4	- C	9 -	GOR-DTM-LOC-SEL-FTX-SG5
SEL	- C	9 -	Seal number

Function:

To specify the seal number or a range of seal numbers.

		EDIFACT	GS1	*	Description
9308	Seal identifier	C an..35	**R**		
C215	SEAL ISSUER	C	**R**		
9303	Sealing party name code	C an..3	**R**		CA = Carrier CU = Customs SH = Shipper TO = Terminal operator
1131	Code list identification code	C an..17	**O**		
3055	Code list responsible agency code	C an..3	**D**		
9302	Sealing party name	C an..35	**O**		
4517	Seal condition code	C an..3	**O**		
C208	IDENTITY NUMBER RANGE	C	**N**		
7402	Object identifier	M an..35			
7402	Object identifier	C an..35			

Segment Notes:

This segment is used to specify a seal number and the sealing party, for the entire consignment, e.g. the carrier being responsible for sealing the truck.

Example:
SEL+4282+CA:::EUROLOG'

Dependency Notes:
The use of the SEL segment in the segment group 37 is recommended. Only if customs seals are involved in particular transport environments such as bonded goods the SEL segment in the segment group 4 should be used.

5. Segments Layout

Segment number: 18

SG4	- C	9 -	GOR-DTM-LOC-SEL-FTX-SG5
FTX	- C	9 -	Free text

Function:

To provide free form or coded text information.

		EDIFACT	GS1	*	Description
4451	Text subject code qualifier	M an..3	**M**		CIP = Customs clearance instruction import
4453	Free text function code	C an..3	**O**		1 = Text for subsequent use 3 = Text for immediate use
C107	TEXT REFERENCE	C	**D**		This composite is only used when trading partners have agreed to use mutually defined code values.
4441	Free text value code	M an..17	**M**		
1131	Code list identification code	C an..17	**O**		
3055	Code list responsible agency code	C an..3	**D**		91 = Assigned by supplier or supplier's agent 92 = Assigned by buyer or buyer's agent
C108	TEXT LITERAL	C	**D**		This composite is only used if coded text can not be used.
4440	Free text value	M an..512	**M**		
4440	Free text value	C an..512	**O**		
4440	Free text value	C an..512	**O**		
4440	Free text value	C an..512	**O**		
4440	Free text value	C an..512	**O**		
3453	Language name code	C an..3	**D**		ISO 639 two alpha code This data element is only used when non coded free text has been provided in data element C108.
4447	Free text format code	C an..3	**N**		

Segment Notes:

This segment is used to specify additional information.
Use of this segment in free form is not recommended since it may inhibit automatic processing of the Transport Instruction. Coded references to standard texts is an available functionality which enables automatic processing and reduces transmission and processing overheads. Standard texts should be mutually defined among trading partners and can be used to cover legal and other requirements.

Example:
FTX+CIP+1+001::91'

5. Segments Layout

Segment number: 19

SG4	- C	9 -	GOR-DTM-LOC-SEL-FTX-SG5
SG5	- C	9 -	DOC-DTM
DOC	- M	1 -	Document/message details

Function:

To identify documents and details directly related to it.

		EDIFACT	GS1	*	Description
C002	DOCUMENT/MESSAGE NAME	M	**M**		
1001	Document name code	C an..3	**R**		821 = Despatch note model T1 822 = Despatch note model T2
1131	Code list identification code	C an..17	**O**		
3055	Code list responsible agency code	C an..3	**D**		
1000	Document name	C an..35	**O**		
C503	DOCUMENT/MESSAGE DETAILS	C	**O**		
1004	Document identifier	C an..35	**R**		
1373	Document status code	C an..3	**O**		2 = Accompanying goods 4 = To arrive by separate EDI message
1366	Document source description	C an..70	**O**		
3453	Language name code	C an..3	**O**		ISO 639 two alpha
1056	Version identifier	C an..9	**N**		
1060	Revision identifier	C an..6	**N**		
3153	Communication medium type code	C an..3	**N**		
1220	Document copies required quantity	C n..2	**O**		
1218	Document originals required quantity	C n..2	**O**		

Segment Notes:

This segment is used to identify any documentation related to the entire consignment which is required by government, e.g. despatch note model T2 that ascertains that all goods of the consignment were originally produced in a country of the European Community.

Example:
DOC+822+12345:2'

5. Segments Layout

Segment number: 20

SG4	- C	9 -	GOR-DTM-LOC-SEL-FTX-SG5
SG5	- C	9 -	DOC-DTM
DTM	- C	1 -	Date/time/period

Function:

To specify date, and/or time, or period.

		EDIFACT	GS1	*	Description
C507	DATE/TIME/PERIOD	M	**M**		
2005	Date or time or period function code qualifier	M an..3	**M**	*	7 = Effective date/time 36 = Expiry date 137 = Document/message date/time 273 = Validity period
2380	Date or time or period value	C an..35	**R**		
2379	Date or time or period format code	C an..3	**R**		102 = CCYYMMDD 203 = CCYYMMDDHHMM 718 = CCYYMMDD-CCYYMMDD

Segment Notes:

This segment is used to specify any dates related to the previous DOC segment, e.g. date of the despatch note model T2.

Example:
DTM+137:20021210:102'

5. Segments Layout

Segment number: 21

SG8	- C	99 -	TDT-DTM-SG9-SG10
TDT	- M	1 -	Details of transport

Function:

To specify the transport details such as mode of transport, means of transport, its conveyance reference number and the identification of the means of transport.

		EDIFACT	GS1	*	Description
8051	Transport stage code qualifier	M an..3	**M**		10 = Pre-carriage transport 20 = Main-carriage transport 30 = On-carriage transport
8028	Means of transport journey identifier	C an..17	**O**		Reference number covering the transport.
C220	MODE OF TRANSPORT	C	**A**		
8067	Transport mode name code	C an..3	**R**		
8066	Transport mode name	C an..17	**N**		
C228	TRANSPORT MEANS	C	**O**		
8179	Transport means description code	C an..8	**D**		23 = Rail bulk car 31 = Truck 3138 = Armoured vehicle
8178	Transport means description	C an..17	**D**		
C040	CARRIER	C	**O**		
3127	Carrier identifier	C an..17	**A**		Global Location Number GLN - Format n13
1131	Code list identification code	C an..17	**O**		
3055	Code list responsible agency code	C an..3	**D**		9 = GS1
3128	Carrier name	C an..35	**O**		
8101	Transit direction indicator code	C an..3	**O**		BS = Buyer to supplier SB = Supplier to buyer
C401	EXCESS TRANSPORTATION INFORMATION	C	**N**		
8457	Excess transportation reason code	M an..3			
8459	Excess transportation responsibility code	M an..3			
7130	Customer shipment authorisation identifier	C an..17			
C222	TRANSPORT IDENTIFICATION	C	**O**		
8213	Transport means identification name identifier	C an..9	**O**		
1131	Code list identification code	C an..17	**O**		
3055	Code list responsible agency code	C an..3	**D**		DE 3055 must be used if DE 8213 is used.
8212	Transport means identification name	C an..35	**R**		Vehicle licence plate/Aircraft number
8453	Transport means nationality code	C an..3	**O**		ISO 3166 two alpha code
	Transport means ownership		**N**		

5. Segments Layout

Segment number: 21

	EDIFACT	GS1	*	Description
8281 indicator code	C an..3			

Segment Notes:

This segment is used to indicate the transport means, and where necessary, the carrier to be used for the consignment for which a transport instruction is being issued. When used, it is mandatory to indicate the main carriage transport mode in this segment.

Example:
TDT+20++30+31'

Dependency Notes:
DE C228: DE 8179 and DE 8178 are only used when the type of transport must be specifically identified, that is, a generic description such as road transport is unsuitable.

5. Segments Layout

Segment number: 22

SG8	- C	99	-	TDT-DTM-SG9-SG10
DTM	- C	9	-	Date/time/period

Function:

To specify date, and/or time, or period.

		EDIFACT	GS1	*	Description
C507	DATE/TIME/PERIOD	M	**M**		
2005	Date or time or period function code qualifier	M an..3	**M**		133 = Departure date/time, estimated 190 = Transhipment date/time
2380	Date or time or period value	C an..35	**R**		
2379	Date or time or period format code	C an..3	**R**		102 = CCYYMMDD 203 = CCYYMMDDHHMM

Segment Notes:

This segment is used to specify dates relating to the transport means.

Example:
DTM+133:200212151000:203'

5. Segments Layout

Segment number: 23

SG8	- C	99 -	TDT-DTM-SG9-SG10
SG9	- C	99 -	LOC-DTM
LOC	- M	1 -	Place/location identification

Function:

To identify a place or a location and/or related locations.

		EDIFACT	GS1	*	Description
3227	Location function code qualifier	M an..3	**M**		9 = Place/port of loading 11 = Place/port of discharge
C517	LOCATION IDENTIFICATION	C	**A**		
3225	Location name code	C an..25	**A**		GLN - Format n13
1131	Code list identification code	C an..17	**O**		
3055	Code list responsible agency code	C an..3	**D**		9 = GS1 DE 3055 must be used if DE 3225 is used and does not contain an UN/LOCODE.
3224	Location name	C an..256	**O**		
C519	RELATED LOCATION ONE IDENTIFICATION	C	**N**		
3223	First related location name code	C an..25			
1131	Code list identification code	C an..17			
3055	Code list responsible agency code	C an..3			
3222	First related location name	C an..70			
C553	RELATED LOCATION TWO IDENTIFICATION	C	**N**		
3233	Second related location name code	C an..25			
1131	Code list identification code	C an..17			
3055	Code list responsible agency code	C an..3			
3232	Second related location name	C an..70			
5479	Relation code	C an..3	**N**		

Segment Notes:

This segment is used to identify locations relating to the transport details for the complete transport instruction.

Example:
LOC+9+5412345678908::9'

5. Segments Layout

Segment number: 24

SG8	- C	99 -	TDT-DTM-SG9-SG10
SG9	- C	99 -	LOC-DTM
DTM	- C	9 -	Date/time/period

Function:

To specify date, and/or time, or period.

		EDIFACT	GS1	*	Description
C507	DATE/TIME/PERIOD	M	**M**		
2005	Date or time or period function code qualifier	M an..3	**M**		133 = Departure date/time, estimated 136 = Departure date/time
2380	Date or time or period value	C an..35	**R**		
2379	Date or time or period format code	C an..3	**R**		102 = CCYYMMDD 203 = CCYYMMDDHHMM

Segment Notes:

This segment is used to specify any dates related to the location identified for a specific stage of transport.

Example:
DTM+133:20021210:102'

5. Segments Layout

Segment number: 25

SG8	- C	99 -	TDT-DTM-SG9-SG10
SG10	- C	9 -	RFF-DTM
RFF	- M	1 -	Reference

Function:

To specify a reference.

		EDIFACT	GS1	*	Description
C506	REFERENCE	M	**M**		
1153	Reference code qualifier	M an..3	**M**		AWB = Air waybill number BM = Bill of lading number CMR = Road consignment note number RCN = Railway consignment note number
1154	Reference identifier	C an..70	**R**		
1156	Document line identifier	C an..6	**N**		
4000	Reference version identifier	C an..35	**N**		
1060	Revision identifier	C an..6	**N**		

Segment Notes:

This segment is used to specify references related to the transport details for the complete transport instruction.

Example:
RFF+AWB:2435362'

5. Segments Layout

Segment number: 26

SG8	- C	99	-	TDT-DTM-SG9-SG10
SG10	- C	9	-	RFF-DTM
DTM	- C	1	-	Date/time/period

Function:

To specify date, and/or time, or period.

		EDIFACT	GS1	*	Description
C507	DATE/TIME/PERIOD	M	**M**		
2005	Date or time or period function code qualifier	M an..3	**M**	*	171 = Reference date/time
2380	Date or time or period value	C an..35	**R**		
2379	Date or time or period format code	C an..3	**R**		102 = CCYYMMDD 203 = CCYYMMDDHHMM 718 = CCYYMMDD-CCYYMMDD

Segment Notes:

This segment is used to specify any dates related to the previous RFF segment.

Example:
DTM+171:20021210:102'

5. Segments Layout

Segment number: 27

SG11	- M	99	-	NAD-LOC-MOA-SG12-SG13-SG15
NAD	- M	1	-	Name and address

Function:

To specify the name/address and their related function, either by C082 only and/or unstructured by C058 or structured by C080 thru 3207.

		EDIFACT	GS1	*	Description
3035	Party function code qualifier	M an..3	**M**		CA = Carrier CG = Carrier's agent CN = Consignee CZ = Consignor DP = Delivery party FP = Freight/charges payer FW = Freight forwarder PW = Despatch party
C082	PARTY IDENTIFICATION DETAILS	C	**A**		
3039	Party identifier	M an..35	**M**		For identification of parties it is recommended to use GLN - Format n13.
1131	Code list identification code	C an..17	**N**		
3055	Code list responsible agency code	C an..3	**R**	*	9 = GS1
C058	NAME AND ADDRESS	C	**O**		This composite may only be used to fulfill the requirements of directive 2003/58/EC, article 4.
3124	Name and address description	M an..35	**M**		
3124	Name and address description	C an..35	**O**		
3124	Name and address description	C an..35	**O**		
3124	Name and address description	C an..35	**O**		
3124	Name and address description	C an..35	**O**		
C080	PARTY NAME	C	**D**		
3036	Party name	M an..35	**M**		Party Name in clear text.
3036	Party name	C an..35	**O**		
3036	Party name	C an..35	**O**		
3036	Party name	C an..35	**O**		
3036	Party name	C an..35	**O**		
3045	Party name format code	C an..3	**O**		
C059	STREET	C	**D**		
3042	Street and number or post office box identifier	M an..35	**M**		Building Name/Number and Street
3042	Street and number or post office box identifier	C an..35	**O**		Name and/or P.O. Box
3042	Street and number or post office box identifier	C an..35	**O**		
3042	Street and number or post office box identifier	C an..35	**O**		
3164	City name	C an..35	**D**		City/Town, clear text.
C819	COUNTRY SUB-ENTITY	C	**D**		

5. Segments Layout

Segment number: 27

		EDIFACT	GS1	*	Description
	DETAILS				
3229	Country sub-entity name code	C an..9	**O**		
1131	Code list identification code	C an..17	**O**		
3055	Code list responsible agency code	C an..3	**O**		
3228	Country sub-entity name	C an..70	**O**		County/State, clear text.
3251	Postal identification code	C an..17	**D**		Postal Code
3207	Country name code	C an..3	**D**		ISO 3166 two alpha code

Segment Notes:

This segment is used to identify the trading partners involved in the Transport Instruction message. Identification of the Consignor and Carrier or Forwarder is mandatory in the Transport Instruction message. If required, a Consignee may also be identified using NAD at this level in the message.

Example:
NAD+PW+5412345000013::9'
NAD+CZ+5412345000020::9'

Dependency Notes:
The following composites and data elements are only used when a coded name and address can not be used.
The affected composites and data elements are as follows:
C080 - C059 - 3164 - C819 - 3251 - 3207

5. Segments Layout

Segment number: 28

SG11	- M	99 -	NAD-LOC-MOA-SG12-SG13-SG15
LOC	- C	9 -	Place/location identification

Function:

To identify a place or a location and/or related locations.

		EDIFACT	GS1	*	Description
3227	Location function code qualifier	M an..3	**M**		7 = Place of delivery
C517	LOCATION IDENTIFICATION	C	**A**		
3225	Location name code	C an..25	**A**		GLN - Format n13
1131	Code list identification code	C an..17	**O**		
3055	Code list responsible agency code	C an..3	**D**		9 = GS1 DE 3055 must be used if DE 3225 is used and does not contain an UN/LOCODE.
3224	Location name	C an..256	**O**		
C519	RELATED LOCATION ONE IDENTIFICATION	C	**N**		
3223	First related location name code	C an..25			
1131	Code list identification code	C an..17			
3055	Code list responsible agency code	C an..3			
3222	First related location name	C an..70			
C553	RELATED LOCATION TWO IDENTIFICATION	C	**N**		
3233	Second related location name code	C an..25			
1131	Code list identification code	C an..17			
3055	Code list responsible agency code	C an..3			
3232	Second related location name	C an..70			
5479	Relation code	C an..3	**N**		

Segment Notes:

This segment is used to identify locations related to the party specified in the NAD segment.
It is recommended that Global Location Numbers GLN - Format n13 - be used for the identification of all locations.

Example:
LOC+7+5412345678908::9'

5. Segments Layout

Segment number: 29

SG11	- M	99	-	NAD-LOC-MOA-SG12-SG13-SG15
MOA	- C	9	-	Monetary amount

Function:

To specify a monetary amount.

		EDIFACT	GS1	*	Description
C516	MONETARY AMOUNT	M	**M**		
5025	Monetary amount type code qualifier	M an..3	**M**		22 = Cash on delivery amount 50 = Disbursements
5004	Monetary amount	C n..35	**R**		
6345	Currency identification code	C an..3	**O**		Use ISO 4217 three alpha.
6343	Currency type code qualifier	C an..3	**N**		
4405	Status description code	C an..3	**N**		

Segment Notes:

This segment is used to indicate monetary amounts for the party receiving the goods.

Example:
MOA+22:15000:EUR'

5. Segments Layout

Segment number: 30

SG11	- M	99	-	NAD-LOC-MOA-SG12-SG13-SG15
SG12	- C	9	-	CTA-COM
CTA	- M	1	-	Contact information

Function:

To identify a person or a department to whom communication should be directed.

		EDIFACT	GS1	*	Description
3139	Contact function code	C an..3	**R**		IC = Information contact TR = Transport contact
C056	DEPARTMENT OR EMPLOYEE DETAILS	C	**O**		
3413	Department or employee name code	C an..17	**O**		
3412	Department or employee name	C an..35	**O**		

Segment Notes:

This segment is used to identify department and contact names within the party specified in the NAD segment.

Example:
CTA+TR+:G REID'

5. Segments Layout

Segment number: 31

SG11	- M	99 -	NAD-LOC-MOA-SG12-SG13-SG15
SG12	- C	9 -	CTA-COM
COM	- C	9 -	Communication contact

Function:

To identify a communication number of a department or a person to whom communication should be directed.

		EDIFACT	GS1	*	Description
C076	COMMUNICATION CONTACT	M	**M**		
3148	Communication address identifier	M an..512	**M**		
3155	Communication address code qualifier	M an..3	**M**		AO = Uniform Resource Location (URL) EM = Electronic mail TE = Telephone

Segment Notes:

This segment identifies the communications number and type of communications for the person or department identified in the previous CTA segment.

Example:
COM+0033148759632:FX'

5. Segments Layout

Segment number: 32

SG11	- M	99 -	NAD-LOC-MOA-SG12-SG13-SG15
SG13	- C	9 -	DOC-DTM
DOC	- M	1 -	Document/message details

Function:

To identify documents and details directly related to it.

		EDIFACT	GS1	*	Description
C002	DOCUMENT/MESSAGE NAME	M	**M**		
1001	Document name code	C an..3	**R**		811 = Export licence 911 = Import licence
1131	Code list identification code	C an..17	**O**		
3055	Code list responsible agency code	C an..3	**D**		
1000	Document name	C an..35	**N**		
C503	DOCUMENT/MESSAGE DETAILS	C	**O**		
1004	Document identifier	C an..35	**R**		
1373	Document status code	C an..3	**O**		
1366	Document source description	C an..70	**O**		
3453	Language name code	C an..3	**O**		ISO 639 two alpha
1056	Version identifier	C an..9	**N**		
1060	Revision identifier	C an..6	**N**		
3153	Communication medium type code	C an..3	**N**		
1220	Document copies required quantity	C n..2	**O**		
1218	Document originals required quantity	C n..2	**O**		

Segment Notes:

This segment is used to identify any documentation related to the party identified in the NAD segment which must accompany the consignment.

Example:
DOC+811+1253D'

5. Segments Layout

Segment number: 33

SG11	- M	99	-	NAD-LOC-MOA-SG12-SG13-SG15
SG13	- C	9	-	DOC-DTM
DTM	- C	1	-	Date/time/period

Function:

To specify date, and/or time, or period.

		EDIFACT	GS1	*	Description
C507	DATE/TIME/PERIOD	M	**M**		
2005	Date or time or period function code qualifier	M an..3	**M**	*	7 = Effective date/time 36 = Expiry date 137 = Document/message date/time 273 = Validity period
2380	Date or time or period value	C an..35	**R**		
2379	Date or time or period format code	C an..3	**R**		102 = CCYYMMDD 203 = CCYYMMDDHHMM 718 = CCYYMMDD-CCYYMMDD

Segment Notes:

This segment is used to specify any dates related to the previous DOC segment.

Example:
DTM+137:20021210:102'

5. Segments Layout

Segment number: 34

SG11	- M	99 -	NAD-LOC-MOA-SG12-SG13-SG15
SG15	- C	9 -	RFF-DTM
RFF	- M	1 -	Reference

Function:

To specify a reference.

		EDIFACT	GS1	*	Description
C506	REFERENCE	M	**M**		
1153	Reference code qualifier	M an..3	**M**	*	YC1 = Additional party identification (GS1 Temporary Code) GN = Government reference number VA = VAT registration number XA = Company/place registration number
1154	Reference identifier	C an..70	**R**		
1156	Document line identifier	C an..6	**N**		
4000	Reference version identifier	C an..35	**N**		
1060	Revision identifier	C an..6	**N**		

Segment Notes:

This segment is used to provide references related to the party identified in the NAD segment.

Example:
RFF+YC1:6532'

5. Segments Layout

Segment number: 35

SG11	- M	99 -	NAD-LOC-MOA-SG12-SG13-SG15
SG15	- C	9 -	RFF-DTM
DTM	- C	9 -	Date/time/period

Function:

To specify date, and/or time, or period.

		EDIFACT	GS1	*	Description
C507	DATE/TIME/PERIOD	M	**M**		
2005	Date or time or period function code qualifier	M an..3	**M**	*	171 = Reference date/time
2380	Date or time or period value	C an..35	**R**		
2379	Date or time or period format code	C an..3	**R**		102 = CCYYMMDD 203 = CCYYMMDDHHMM 718 = CCYYMMDD-CCYYMMDD

Segment Notes:

This segment is used to specify dates relating to the references given in the previous RFF segment.

Example:
DTM+171:20021125:102'

5. Segments Layout

Segment number: 36

SG18	- C	999 -	GID-HAN-TMP-RNG-LOC-MOA-PIA-FTX-SG19-GDS-SG20-SG21-SG22-SG23-SG24-SG29-SG32
GID	- M	1 -	Goods item details

Function:

To indicate totals of a goods item.

		EDIFACT	GS1	*	Description
1496	Goods item number	C n..5	**R**		Application number identifying items within the current consignment.
C213	NUMBER AND TYPE OF PACKAGES	C	**R**		Despatch units are identified in the first occurrence of this composite.
7224	Package quantity	C n..8	**R**		
7065	Package type description code	C an..17	**O**		09 = Returnable pallet (GS1 Temporary Code) 201 = Pallet ISO 1 - 1/1 EURO Pallet (GS1 Temporary Code)
1131	Code list identification code	C an..17	**N**		
3055	Code list responsible agency code	C an..3	**D**	*	9 = GS1
7064	Type of packages	C an..35	**N**		
7233	Packaging related description code	C an..3	**N**		
C213	NUMBER AND TYPE OF PACKAGES	C	**O**		
7224	Package quantity	C n..8	**O**		
7065	Package type description code	C an..17	**O**		09 = Returnable pallet (GS1 Temporary Code) 201 = Pallet ISO 1 - 1/1 EURO Pallet (GS1 Temporary Code)
1131	Code list identification code	C an..17	**N**		
3055	Code list responsible agency code	C an..3	**D**	*	9 = GS1 This data element is only used with the code value '9' if the code value in data element 7065 is an GS1 code.
7064	Type of packages	C an..35	**N**		
7233	Packaging related description code	C an..3	**N**		
C213	NUMBER AND TYPE OF PACKAGES	C	**O**		
7224	Package quantity	C n..8	**O**		
7065	Package type description code	C an..17	**O**		09 = Returnable pallet (GS1 Temporary Code) 201 = Pallet ISO 1 - 1/1 EURO Pallet (GS1 Temporary Code)
1131	Code list identification code	C an..17	**N**		
3055	Code list responsible agency code	C an..3	**D**	*	9 = GS1
7064	Type of packages	C an..35	**N**		
7233	Packaging related description	C an..3	**N**		

5. Segments Layout

Segment number: 36

		EDIFACT	GS1	*	Description
	code				
C213	NUMBER AND TYPE OF PACKAGES	C	**O**		
7224	Package quantity	C n..8	**O**		
7065	Package type description code	C an..17	**O**		09 = Returnable pallet (GS1 Temporary Code) 201 = Pallet ISO 1 - 1/1 EURO Pallet (GS1 Temporary Code)
1131	Code list identification code	C an..17	**N**		
3055	Code list responsible agency code	C an..3	**D**	*	9 = GS1
7064	Type of packages	C an..35	**N**		
7233	Packaging related description code	C an..3	**N**		
C213	NUMBER AND TYPE OF PACKAGES	C	**O**		
7224	Package quantity	C n..8	**O**		
7065	Package type description code	C an..17	**O**		09 = Returnable pallet (GS1 Temporary Code) 201 = Pallet ISO 1 - 1/1 EURO Pallet (GS1 Temporary Code)
1131	Code list identification code	C an..17	**N**		
3055	Code list responsible agency code	C an..3	**D**	*	9 = GS1
7064	Type of packages	C an..35	**N**		
7233	Packaging related description code	C an..3	**N**		

Segment Notes:

This segment is the trigger segment for the detail section of the transport instruction message. It is used to specify the number and type of packaging for the goods item.
Within the GID segment it is possible to identify up to 5 levels of packaging hierarchy for the transport goods item.
Despatch units are identified in the first occurrence of C213.

Example:
GID+1+1:09::9+6:CT'
(The top level is returnable pallet which contains a second level of 6 cartons.)

5. Segments Layout

Segment number: 37

SG18	- C	999 -	GID-HAN-TMP-RNG-LOC-MOA-PIA-FTX-SG19-GDS-SG20-SG21-SG22-SG23-SG24-SG29-SG32
HAN	- C	99 -	Handling instructions

Function:

To specify handling and where necessary, notify hazards.

		EDIFACT	GS1	*	Description
C524	HANDLING INSTRUCTIONS	C	**A**		
4079	Handling instruction description code	C an..3	**R**		15 = Hang garment BIG = Outsized (GS1 Temporary Code) CRU = Crushable (GS1 Temporary Code) EAT = Foodstuffs (GS1 Temporary Code) HWC = Handle with care (GS1 Temporary Code) STR = Stacking restricted (GS1 Temporary Code) UST = Unstackable (GS1 Temporary Code)
1131	Code list identification code	C an..17	**A**		
3055	Code list responsible agency code	C an..3	**D**	*	9 = GS1 60 = Assigned by national trade agency DE 3055 must be used if DE 4079 is used and does not contain an UN/EDIFACT code.
4078	Handling instruction description	C an..70	**O**		
C218	HAZARDOUS MATERIAL	C	**O**		The identification of hazardous materials is carried out using the DGS and FTX segments at goods item level.
7419	Hazardous material category name code	C an..7	**D**		The preferred way to provide 'ADR international classification' or 'Hazardous material standard text' is to use DE 1131. Used to provide the material class code of an organization.
1131	Code list identification code	C an..17	**O**		ADR = Accord Europeen au transport international dangereuses (GS1 Temporary Code) HMT = Hazardous material standard text (GS1 Temporary Code)
3055	Code list responsible agency code	C an..3	**D**	*	9 = GS1
7418	Hazardous material category name	C an..35	**O**		To be used when no code value is available for DE7419.

Segment Notes:

This segment is used to provide handling instructions relevant to the transport line item identified in the GID segment.

Example:
HAN+EAT::9'

5. Segments Layout

Segment number: 38

SG18	- C	999 -	GID-HAN-TMP-RNG-LOC-MOA-PIA-FTX-SG19-GDS-SG20-SG21-SG22-SG23-SG24-SG29-SG32
TMP	- C	1 -	Temperature

Function:

To specify the temperature setting.

		EDIFACT	GS1	*	Description
6245	Temperature type code qualifier	M an..3	**M**		1 = Storage temperature 2 = Transport temperature
C239	TEMPERATURE SETTING	C	**R**		
6246	Temperature value	C n..15	**R**		
6411	Measurement unit code	C an..3	**O**		

Segment Notes:

This segment is used to specify a temperature setting related to the current goods item.

Example:
TMP+1+40:CEL'

5. Segments Layout

Segment number: 39

SG18	- C	999 -	GID-HAN-TMP-RNG-LOC-MOA-PIA-FTX-SG19-GDS-SG20-SG21-SG22-SG23-SG24-SG29-SG32
RNG	- C	1 -	Range details

Function:

To identify a range.

		EDIFACT	GS1	*	Description
6167	Range type code qualifier	M an..3	**M**	*	5 = Temperature range
C280	RANGE	C	**R**		
6411	Measurement unit code	M an..3	**M**		
6162	Range minimum value	C n..18	**R**		
6152	Range maximum value	C n..18	**O**		

Segment Notes:

This segment is used to specify a temperature range related to the current goods item.

Example:
RNG+5+CEL:40:45'

5. Segments Layout

Segment number: 40

SG18	- C	999 -	GID-HAN-TMP-RNG-LOC-MOA-PIA-FTX-SG19-GDS-SG20-SG21-SG22-SG23-SG24-SG29-SG32
LOC	- C	9 -	Place/location identification

Function:

To identify a place or a location and/or related locations.

		EDIFACT	GS1	*	Description
3227	Location function code qualifier	M an..3	**M**		27 = Country of origin
C517	LOCATION IDENTIFICATION	C	**A**		
3225	Location name code	C an..25	**A**		For country identification see ISO 3166 two alpha code, DE 3207
1131	Code list identification code	C an..17	**O**		
3055	Code list responsible agency code	C an..3	**D**		5 = ISO (International Organization for Standardization) 9 = GS1 DE 3055 must be used if DE 3225 is used and does not contain an UN/LOCODE.
3224	Location name	C an..256	**O**		
C519	RELATED LOCATION ONE IDENTIFICATION	C	**N**		
3223	First related location name code	C an..25			
1131	Code list identification code	C an..17			
3055	Code list responsible agency code	C an..3			
3222	First related location name	C an..70			
C553	RELATED LOCATION TWO IDENTIFICATION	C	**N**		
3233	Second related location name code	C an..25			
1131	Code list identification code	C an..17			
3055	Code list responsible agency code	C an..3			
3232	Second related location name	C an..70			
5479	Relation code	C an..3	**N**		

Segment Notes:

This segment is used to indicate locations relevant to the current goods item line.

Example:
LOC+27+BE::5'

5. Segments Layout

Segment number: 41

SG18	- C	999 -	GID-HAN-TMP-RNG-LOC-MOA-PIA-FTX-SG19-GDS-SG20-SG21-SG22-SG23-SG24-SG29-SG32
MOA	- C	9 -	Monetary amount

Function:

To specify a monetary amount.

		EDIFACT	GS1	*	Description
C516	MONETARY AMOUNT	M	**M**		
5025	Monetary amount type code qualifier	M an..3	**M**		40 = Customs value 44 = Declared value for carriage 157 = Insurance value
5004	Monetary amount	C n..35	**R**		
6345	Currency identification code	C an..3	**O**		ISO 4217 three alpha
6343	Currency type code qualifier	C an..3	**N**		
4405	Status description code	C an..3	**N**		

Segment Notes:

This segment is used to specify the value of the goods item for customs, insurance or other valuation purposes.

Example:
MOA+40:45300:EUR'

5. Segments Layout

Segment number: 42

SG18	- C	999 -	GID-HAN-TMP-RNG-LOC-MOA-PIA-FTX-SG19-GDS-SG20-SG21-SG22-SG23-SG24-SG29-SG32
PIA	- C	9 -	Additional product id

Function:

To specify additional or substitutional item identification codes.

		EDIFACT	GS1	*	Description
4347	Product identifier code qualifier	M an..3	**M**	*	1 = Additional identification 5 = Product identification Product Id function, coded has the following restricted coded functions: 1 = Additional Identification - To provide additional identifications for the goods item specified in the GID segment, e.g. harmonised system codes. 5 = Product Identification - To provide global trade item number(s) of the products contained in the current goods item identified in the GID segment.
C212	ITEM NUMBER IDENTIFICATION	M	**M**		
7140	Item identifier	C an..35	**R**		
7143	Item type identification code	C an..3	**R**		HS = Harmonised system SRV = GS1 Global Trade Item Number
1131	Code list identification code	C an..17	**O**		
3055	Code list responsible agency code	C an..3	**D**		9 = GS1 89 = Assigned by distributor 91 = Assigned by supplier or supplier's agent 92 = Assigned by buyer or buyer's agent
C212	ITEM NUMBER IDENTIFICATION	C	**O**		
7140	Item identifier	C an..35	**R**		
7143	Item type identification code	C an..3	**R**		
1131	Code list identification code	C an..17	**O**		
3055	Code list responsible agency code	C an..3	**D**		
C212	ITEM NUMBER IDENTIFICATION	C	**O**		
7140	Item identifier	C an..35	**R**		
7143	Item type identification code	C an..3	**R**		
1131	Code list identification code	C an..17	**O**		
3055	Code list responsible agency code	C an..3	**D**		
C212	ITEM NUMBER IDENTIFICATION	C	**O**		
7140	Item identifier	C an..35	**R**		
7143	Item type identification code	C an..3	**R**		
1131	Code list identification code	C an..17	**O**		
3055	Code list responsible agency code	C an..3	**D**		
C212	ITEM NUMBER	C	**O**		

5. Segments Layout

Segment number: 42

		EDIFACT	GS1	*	Description
	IDENTIFICATION				
7140	Item identifier	C an..35	**R**		
7143	Item type identification code	C an..3	**R**		
1131	Code list identification code	C an..17	**O**		
3055	Code list responsible agency code	C an..3	**D**		

Segment Notes:

This segment is used to specify identification codes relating to the goods item for which a transport instruction is being issued.
Code values provided in this segment are provided for information purposes and not for the identification of the goods to be consigned. The identification of the goods to be consigned is carried out in the GID segment.

Example:
PIA+1+HS003211:HS'
PIA+5+5410738251028:SRV'

5. Segments Layout

Segment number: 43

SG18	- C	999 -	GID-HAN-TMP-RNG-LOC-MOA-PIA-FTX-SG19-GDS-SG20-SG21-SG22-SG23-SG24-SG29-SG32
FTX	- C	99 -	Free text

Function:

To provide free form or coded text information.

		EDIFACT	GS1	*	Description
4451	Text subject code qualifier	M an..3	**M**		AAA = Goods description AAI = General information DEL = Delivery information SIN = Special instructions ZZZ = Mutually defined
4453	Free text function code	C an..3	**O**		1 = Text for subsequent use
C107	TEXT REFERENCE	C	**D**		This composite is only used when trading partners have agreed to use mutually defined code values.
4441	Free text value code	M an..17	**M**		
1131	Code list identification code	C an..17	**O**		
3055	Code list responsible agency code	C an..3	**D**		9 = GS1 91 = Assigned by supplier or supplier's agent 92 = Assigned by buyer or buyer's agent
C108	TEXT LITERAL	C	**D**		This composite is only used if coded text can not be used.
4440	Free text value	M an..512	**M**		
4440	Free text value	C an..512	**O**		
4440	Free text value	C an..512	**O**		
4440	Free text value	C an..512	**O**		
4440	Free text value	C an..512	**O**		
3453	Language name code	C an..3	**D**		ISO 639 two alpha code This data element is only used when non coded free text has been provided in data element C108.
4447	Free text format code	C an..3	**N**		

Segment Notes:

This segment is used to provide free form or coded text information related to the goods item.
Use of this segment in free form is not recommended since it may inhibit automatic processing of the Transport Instruction. Coded references to standard texts is an available functionality which enables automatic processing and reduces transmission overheads. Standard texts should be mutually defined between trading partners and can be used to cover legal or other requirements.
Note 1: All free text descriptive data for the goods item must be placed in this segment using code value 'AAA' in data element 4451.

Example:
FTX+AAA+++CONSUMER ELECTRONICS'

5. Segments Layout

Segment number: 44

SG18	- C	999 -	GID-HAN-TMP-RNG-LOC-MOA-PIA-FTX-SG19-GDS-SG20-SG21-SG22-SG23-SG24-SG29-SG32
SG19	- C	9 -	NAD-DTM
NAD	- M	1 -	Name and address

Function:

To specify the name/address and their related function, either by C082 only and/or unstructured by C058 or structured by C080 thru 3207.

		EDIFACT	GS1	*	Description
3035	Party function code qualifier	M an..3	**M**	*	DP = Delivery party PW = Despatch party
C082	PARTY IDENTIFICATION DETAILS	C	**A**		
3039	Party identifier	M an..35	**M**		For identification of parties it is recommended to use GLN - Format n13.
1131	Code list identification code	C an..17	**N**		
3055	Code list responsible agency code	C an..3	**R**	*	9 = GS1
C058	NAME AND ADDRESS	C	**O**		This composite may only be used to fulfill the requirements of directive 2003/58/EC, article 4.
3124	Name and address description	M an..35	**M**		
3124	Name and address description	C an..35	**O**		
3124	Name and address description	C an..35	**O**		
3124	Name and address description	C an..35	**O**		
3124	Name and address description	C an..35	**O**		
C080	PARTY NAME	C	**D**		Party Name in clear text.
3036	Party name	M an..35	**M**		
3036	Party name	C an..35	**O**		
3036	Party name	C an..35	**O**		
3036	Party name	C an..35	**O**		
3036	Party name	C an..35	**O**		
3045	Party name format code	C an..3	**O**		
C059	STREET	C	**D**		
3042	Street and number or post office box identifier	M an..35	**M**		Building Name/Number and Street
3042	Street and number or post office box identifier	C an..35	**O**		Name and/or P.O. Box
3042	Street and number or post office box identifier	C an..35	**O**		
3042	Street and number or post office box identifier	C an..35	**O**		
3164	City name	C an..35	**D**		City/Town, clear text.
C819	COUNTRY SUB-ENTITY DETAILS	C	**D**		
3229	Country sub-entity name code	C an..9	**O**		
1131	Code list identification code	C an..17	**O**		

5. Segments Layout

Segment number: 44

		EDIFACT	GS1	*	Description
3055	Code list responsible agency code	C an..3	**O**		
3228	Country sub-entity name	C an..70	**O**		County/State, clear text.
3251	Postal identification code	C an..17	**D**		Postal Code
3207	Country name code	C an..3	**D**		ISO 3166 two alpha code

Segment Notes:

This segment is used to identify parties related to the despatch and delivery of the current goods item.
Information provided here will override similar information provided at the heading level (group 11) when the same qualifier is used.
Only two repetitions of this segment are allowed per goods item.

Example:
NAD+PW+5411234512309::9'
NAD+DP+5412345123453::9'

Dependency Notes:
The following composites and data elements are only used when a coded name and address can not be used.
The affected composites and data elements are as follows:
C080 - C059 - 3164 - C819 - 3251 - 3207

5. Segments Layout

Segment number: 45

SG18	- C	999 -	GID-HAN-TMP-RNG-LOC-MOA-PIA-FTX-SG19-GDS-SG20-SG21-SG22-SG23-SG24-SG29-SG32
SG19	- C	9 -	NAD-DTM
DTM	- C	1 -	Date/time/period

Function:

To specify date, and/or time, or period.

		EDIFACT	GS1	*	Description
C507	DATE/TIME/PERIOD	M	**M**		
2005	Date or time or period function code qualifier	M an..3	**M**	*	2 = Delivery date/time, requested 10 = Shipment date/time, requested 63 = Delivery date/time, latest 64 = Delivery date/time, earliest 179 = Booking date/time 186 = Departure date/time, actual 191 = Delivery date/time, expected 200 = Pick-up/collection date/time of cargo
2380	Date or time or period value	C an..35	**R**		
2379	Date or time or period format code	C an..3	**R**		102 = CCYYMMDD 203 = CCYYMMDDHHMM 719 = CCYYMMDDHHMM-CCYYMMDDHHMM

Segment Notes:

This segment is used to specify dates and times relating to the despatch or delivery parties specified in the previous NAD segment.

Example:
DTM+191:20021220:102'

5. Segments Layout

Segment number: 46

SG18	- C	999 -	GID-HAN-TMP-RNG-LOC-MOA-PIA-FTX-SG19-GDS-SG20-SG21-SG22-SG23-SG24-SG29-SG32
GDS	- C	9 -	Nature of cargo

Function:

To indicate the type of cargo as a general classification.

		EDIFACT	GS1	*	Description
C703	NATURE OF CARGO	C	**R**		
7085	Cargo type classification code	M an..3	**M**		11 = Hazardous cargo 12 = General cargo
1131	Code list identification code	C an..17	**O**		
3055	Code list responsible agency code	C an..3	**D**		

Segment Notes:

This segment is used to specify the exact nature of the goods.

Example:
GDS+11'

5. Segments Layout

Segment number: 47

SG18	- C	999 -	GID-HAN-TMP-RNG-LOC-MOA-PIA-FTX-SG19-GDS-SG20-SG21-SG22-SG23-SG24-SG29-SG32
SG20	- C	99 -	MEA-EQN
MEA	- M	1 -	Measurements

Function:

To specify physical measurements, including dimension tolerances, weights and counts.

		EDIFACT	GS1	*	Description
6311	Measurement purpose code qualifier	M an..3	**M**		AAE = Measurement CHW = Chargeable weight LMT = Loading metre
C502	MEASUREMENT DETAILS	C	**A**		
6313	Measured attribute code	C an..3	**A**		AAB = Unit gross weight AAW = Gross volume AFF = Gross measure cube G = Gross weight LN = Length dimension NPP = Number of pallet places (GS1 Temporary Code) PMC = Package net measurement cube (GS1 Temporary Code) T = Tare weight This qualifier determines the measurement value to be applied either to one single despatch unit of the goods item or to a number of despatch units of the goods item. When Unit Gross Weight is provided in this segment the measurement provided relates to the total gross weight of one single despatch unit in the goods item. The number of despatch units of the goods item that all have the same quoted gross weight is specified in the EQN segment when different from the number of despatch units specified in the GID segment. When Gross Weight is provided the measurement relates to the total gross weight of a number of despatch units in the goods item. The number of despatch units of the goods item that together have the quoted gross weight is specified in the EQN segment when different from the number of despatch units specified in the GID segment.
6321	Measurement significance code	C an..3	**O**		3 = Approximately 4 = Equal to
6155	Non-discrete measurement name code	C an..17	**N**		
6154	Non-discrete measurement name	C an..70	**N**		
C174	VALUE/RANGE	C	**R**		
6411	Measurement unit code	M an..3	**M**		
6314	Measurement value	C an..18	**O**		
6162	Range minimum value	C n..18	**O**		
6152	Range maximum value	C n..18	**O**		
6432	Significant digits quantity	C n..2	**O**		

5. Segments Layout

Segment number: 47

	EDIFACT	GS1	*	Description
7383 Surface or layer code	C an..3	**O**		

Segment Notes:

This segment is used to specify a measurement for the goods identified in the GID segment. All measurements given in the MEA segments relate to the highest level of packaging (the despatch units) identified in the GID segment.

Example:
MEA+CHW+G+KGM:1600'

5. Segments Layout

Segment number: 48

SG18	- C	999	-	GID-HAN-TMP-RNG-LOC-MOA-PIA-FTX-SG19-GDS-SG20-SG21-SG22-SG23-SG24-SG29-SG32
SG20	- C	99	-	MEA-EQN
EQN	- C	1	-	Number of units

Function:

To specify the number of units.

		EDIFACT	GS1	*	Description
C523	NUMBER OF UNIT DETAILS	M	**M**		
6350	Units quantity	C n..15	**R**		
6353	Unit type code qualifier	C an..3	**N**		

Segment Notes:

This segment is used to specify the number of packages (despatch units) within the goods item to which the measurement applies.

Example:
EQN+10'

5. Segments Layout

Segment number: 49

SG18	- C	999	-	GID-HAN-TMP-RNG-LOC-MOA-PIA-FTX-SG19-GDS-SG20-SG21-SG22-SG23-SG24-SG29-SG32
SG21	- C	99	-	DIM-EQN
DIM	- M	1	-	Dimensions

Function:

To specify dimensions.

		EDIFACT	GS1	*	Description
6145	Dimension type code qualifier	M an..3	**M**		1 = Gross dimensions 10E = Unit gross dimensions (GS1 Temporary Code) This qualifier determines the dimension values to be applied either to one single despatch unit of the goods item or to a number of despatch units of the goods item. When Unit Gross Dimensions are provided in this segment the dimension values provided relate to the total gross dimensions of one single despatch unit in the goods item. The number of despatch units of the goods item that all have the same quoted gross dimensions is specified in the EQN segment when different from the number of despatch units specified in the GID segment. When Gross Dimensions are provided the dimension values relate to the total gross dimension of a number of despatch units in the goods item. The number of despatch units of the goods item that together have the quoted gross dimension is specified in the EQN segment when different from the number of despatch units specified in the GID segment.
C211	DIMENSIONS	M	**M**		
6411	Measurement unit code	M an..3	**M**		
6168	Length dimension value	C n..15	**O**		
6140	Width dimension value	C n..15	**O**		
6008	Height dimension value	C n..15	**O**		

Segment Notes:

This segment is used to indicate the dimensions of the goods item identified in the GID segment. All dimensions given in the DIM segments relate to the highest level packaging (the despatch units) identified in the GID segment.

Example:
DIM+1+MTR:4:2:2'

5. Segments Layout

Segment number: 50

SG18	- C	999	-	GID-HAN-TMP-RNG-LOC-MOA-PIA-FTX-SG19-GDS-SG20-SG21-SG22-SG23-SG24-SG29-SG32
SG21	- C	99	-	DIM-EQN
EQN	- C	1	-	Number of units

Function:

To specify the number of units.

		EDIFACT	GS1	*	Description
C523	NUMBER OF UNIT DETAILS	M	**M**		
6350	Units quantity	C n..15	**R**		
6353	Unit type code qualifier	C an..3	**N**		

Segment Notes:

This segment is used to specify the number of packages (despatch units) within the goods items to which the dimensions apply.

Example:
EQN+40'

5. Segments Layout

Segment number: 51

SG18	- C	999 -	GID-HAN-TMP-RNG-LOC-MOA-PIA-FTX-SG19-GDS-SG20-SG21-SG22-SG23-SG24-SG29-SG32
SG22	- C	9 -	RFF-DTM
RFF	- M	1 -	Reference

Function:

To specify a reference.

		EDIFACT	GS1	*	Description
C506	REFERENCE	M	**M**		
1153	Reference code qualifier	M an..3	**M**		AWB = Air waybill number CT = Contract number HWB = House waybill number MWB = Master air waybill number
1154	Reference identifier	C an..70	**R**		
1156	Document line identifier	C an..6	**N**		
4000	Reference version identifier	C an..35	**N**		
1060	Revision identifier	C an..6	**N**		

Segment Notes:

This segment is used to specify references which are applicable to the current goods item only.

Example:
RFF+CT:52441'

5. Segments Layout

Segment number: 52

SG18	- C	999 -	GID-HAN-TMP-RNG-LOC-MOA-PIA-FTX-SG19-GDS-SG20-SG21-SG22-SG23-SG24-SG29-SG32
SG22	- C	9 -	RFF-DTM
DTM	- C	9 -	Date/time/period

Function:

To specify date, and/or time, or period.

		EDIFACT	GS1	*	Description
C507	DATE/TIME/PERIOD	M	**M**		
2005	Date or time or period function code qualifier	M an..3	**M**	*	171 = Reference date/time
2380	Date or time or period value	C an..35	**R**		
2379	Date or time or period format code	C an..3	**R**		102 = CCYYMMDD 203 = CCYYMMDDHHMM 718 = CCYYMMDD-CCYYMMDD

Segment Notes:

This segment is used to indicate dates relevant to the references specified in the previous RFF segment.

Example:
DTM+171:20021010:102'

5. Segments Layout

Segment number: 53

SG18	- C	999 -	GID-HAN-TMP-RNG-LOC-MOA-PIA-FTX-SG19-GDS-SG20-SG21-SG22-SG23-SG24-SG29-SG32
SG23	- C	999 -	PCI-GIN
PCI	- M	1 -	Package identification

Function:

To specify markings and labels on individual packages or physical units.

		EDIFACT	GS1	*	Description
4233	Marking instructions code	C an..3	**R**		17 = Supplier's instructions 18 = Carrier's instructions 39 = Marked with Serial Shipping Container Code (SSCC)
C210	MARKS & LABELS	C	**O**		
7102	Shipping marks description	M an..35	**M**		
7102	Shipping marks description	C an..35	**O**		
7102	Shipping marks description	C an..35	**O**		
7102	Shipping marks description	C an..35	**O**		
7102	Shipping marks description	C an..35	**O**		
7102	Shipping marks description	C an..35	**O**		
7102	Shipping marks description	C an..35	**O**		
7102	Shipping marks description	C an..35	**O**		
7102	Shipping marks description	C an..35	**O**		
7102	Shipping marks description	C an..35	**O**		
8275	Container or package contents indicator code	C an..3	**N**		
C827	TYPE OF MARKING	C	**N**		
7511	Marking type code	M an..3			
1131	Code list identification code	C an..17			
3055	Code list responsible agency code	C an..3			

Segment Notes:

This segment is used to specify markings and labels which have been marked on the packaging of the current goods item.

Example:
PCI+39'

5. Segments Layout

Segment number: 54

SG18	- C	999 -	GID-HAN-TMP-RNG-LOC-MOA-PIA-FTX-SG19-GDS-SG20-SG21-SG22-SG23-SG24-SG29-SG32
SG23	- C	999 -	PCI-GIN
GIN	- C	10 -	Goods identity number

Function:

To give specific identification numbers, either as single numbers or ranges.

		EDIFACT	GS1	*	Description
7405	Object identification code qualifier	M an..3	**M**	*	AW = Serial shipping container code BJ = Serial shipping container code In EANCOM it is required to use the Serial Shipping Container Code (SSCC's) for unique identification of individual transport packages.
C208	IDENTITY NUMBER RANGE	M	**M**		
7402	Object identifier	M an..35	**M**		
7402	Object identifier	C an..35	**O**		
C208	IDENTITY NUMBER RANGE	C	**O**		
7402	Object identifier	M an..35	**M**		
7402	Object identifier	C an..35	**O**		
C208	IDENTITY NUMBER RANGE	C	**O**		
7402	Object identifier	M an..35	**M**		
7402	Object identifier	C an..35	**O**		
C208	IDENTITY NUMBER RANGE	C	**O**		
7402	Object identifier	M an..35	**M**		
7402	Object identifier	C an..35	**O**		
C208	IDENTITY NUMBER RANGE	C	**O**		
7402	Object identifier	M an..35	**M**		
7402	Object identifier	C an..35	**O**		

Segment Notes:

This segment is used to provide the Serial Shipping Container Code marked on the packaging of the current goods item.

Example:
GIN+AW+354123450000000014'

5. Segments Layout

Segment number: 55

SG18	- C	999 -	GID-HAN-TMP-RNG-LOC-MOA-PIA-FTX-SG19-GDS-SG20-SG21-SG22-SG23-SG24-SG29-SG32
SG24	- C	9 -	DOC-DTM
DOC	- M	1 -	Document/message details

Function:

To identify documents and details directly related to it.

		EDIFACT	GS1	*	Description
C002	DOCUMENT/MESSAGE NAME	M	**M**		
1001	Document name code	C an..3	**R**		811 = Export licence 911 = Import licence
1131	Code list identification code	C an..17	**O**		
3055	Code list responsible agency code	C an..3	**D**		
1000	Document name	C an..35	**N**		
C503	DOCUMENT/MESSAGE DETAILS	C	**O**		
1004	Document identifier	C an..35	**R**		
1373	Document status code	C an..3	**O**		2 = Accompanying goods
1366	Document source description	C an..70	**O**		
3453	Language name code	C an..3	**O**		ISO 639 two alpha
1056	Version identifier	C an..9	**N**		
1060	Revision identifier	C an..6	**N**		
3153	Communication medium type code	C an..3	**N**		
1220	Document copies required quantity	C n..2	**O**		
1218	Document originals required quantity	C n..2	**O**		

Segment Notes:

This segment is used to specify documents which are required for the current transport goods item only and which must accompany the consignment.

Example:
DOC+811+52441'

5. Segments Layout

Segment number: 56

SG18	- C	999 -	GID-HAN-TMP-RNG-LOC-MOA-PIA-FTX-SG19-GDS-SG20-SG21-SG22-SG23-SG24-SG29-SG32
SG24	- C	9 -	DOC-DTM
DTM	- C	9 -	Date/time/period

Function:

To specify date, and/or time, or period.

		EDIFACT	GS1	*	Description
C507	DATE/TIME/PERIOD	M	**M**		
2005	Date or time or period function code qualifier	M an..3	**M**	*	7 = Effective date/time 36 = Expiry date 137 = Document/message date/time 273 = Validity period
2380	Date or time or period value	C an..35	**R**		
2379	Date or time or period format code	C an..3	**R**		102 = CCYYMMDD 203 = CCYYMMDDHHMM 718 = CCYYMMDD-CCYYMMDD

Segment Notes:

This segment is used to specify dates relating to the documents identified in the previous DOC segment.

Example:
DTM+36:20020101:102'

5. Segments Layout

Segment number: 57

SG18	- C	999 -	GID-HAN-TMP-RNG-LOC-MOA-PIA-FTX-SG19-GDS-SG20-SG21-SG22-SG23-SG24-SG29-SG32
SG29	- C	999 -	SGP
SGP	- M	1 -	Split goods placement

Function:

To specify the placement of goods in relation to equipment.

		EDIFACT	GS1	*	Description
C237	EQUIPMENT IDENTIFICATION	M	**M**		
8260	Equipment identifier	C an..17	**R**		The value in DE 8260 indicates the identity number of the equipment in/on which the goods item is transported.
1131	Code list identification code	C an..17	**O**		
3055	Code list responsible agency code	C an..3	**D**		
3207	Country name code	C an..3	**N**		
7224	Package quantity	C n..8	**O**		

Segment Notes:

This segment is used to specify the placement of the goods item in equipment used to transport the consignment.

Example:
SGP+45223+1'

5. Segments Layout

Segment number: 58

SG18	- C	999 -	GID-HAN-TMP-RNG-LOC-MOA-PIA-FTX-SG19-GDS-SG20-SG21-SG22-SG23-SG24-SG29-SG32
SG32	- C	99 -	DGS-FTX-SG33-SG34
DGS	- M	1 -	Dangerous goods

Function:

To identify dangerous goods.

		EDIFACT	GS1	*	Description
8273	Dangerous goods regulations code	C an..3	**R**		ADR = European agreement regarding the total carriage of dangerous goods CFR = 49 code of federal regulations ICA = IATA ICAO RID = Rail/road dangerous goods book (RID)
C205	HAZARD CODE	C	**O**		
8351	Hazard identification code	M an..7	**M**		Classification according ADR/RID rules
8078	Additional hazard classification identifier	C an..7	**O**		Additional according ADR/RID rules
8092	Hazard code version identifier	C an..10	**O**		
C234	UNDG INFORMATION	C	**O**		
7124	United Nations Dangerous Goods (UNDG) identifier	C n4	**O**		
7088	Dangerous goods flashpoint value	C an..8	**O**		Declaration of the flashpoint.
C223	DANGEROUS GOODS SHIPMENT FLASHPOINT	C	**O**		
7106	Shipment flashpoint value	C n3	**O**		
6411	Measurement unit code	C an..3	**O**		
8339	Packaging danger level code	C an..3	**O**		1 = Great danger 2 = Medium danger 3 = Minor danger
8364	Emergency procedure for ships identifier	C an..6	**O**		Only for emergency procedure on ships.
8410	Hazard medical first aid guide identifier	C an..4	**O**		
8126	Transport emergency card identifier	C an..10	**O**		TREM card number according ADR.
C235	HAZARD IDENTIFICATION PLACARD DETAILS	C	**O**		
8158	Orange hazard placard upper part identifier	C an..4	**O**		Danger signs upper part.
8186	Orange hazard placard lower part identifier	C an4	**O**		Danger signs lower part.
C236	DANGEROUS GOODS LABEL	C	**O**		According ADR, FID, IMDG-code, IATA-DGR.
8246	Dangerous goods marking identifier	C an..4	**O**		Number of dangerous goods document primary hazard.
8246	Dangerous goods marking identifier	C an..4	**O**		Number of dangerous goods document secondary hazard.
	Dangerous goods marking				

5. Segments Layout

Segment number: 58

		EDIFACT	GS1	*	Description
8246	identifier	C an..4	**O**		
8255	Packing instruction type code	C an..3	**O**		
8325	Hazardous means of transport category code	C an..3	**O**		Only used by air carrier.
8211	Hazardous cargo transport authorisation code	C an..3	**O**		

Segment Notes:

This segment is used to indicate whether the goods item contains any dangerous goods.

Example:
DGS+ADR+3B+1178+021:CEL'

5. Segments Layout

Segment number: 59

SG18	- C	999 -	GID-HAN-TMP-RNG-LOC-MOA-PIA-FTX-SG19-GDS-SG20-SG21-SG22-SG23-SG24-SG29-SG32
SG32	- C	99 -	DGS-FTX-SG33-SG34
FTX	- C	99 -	Free text

Function:

To provide free form or coded text information.

		EDIFACT	GS1	*	Description
4451	Text subject code qualifier	M an..3	**M**		AAC = Dangerous goods additional information AAD = Dangerous goods, technical name
4453	Free text function code	C an..3	**O**		1 = Text for subsequent use
C107	TEXT REFERENCE	C	**D**		This composite is only used when trading partners have agreed to use mutually defined code values.
4441	Free text value code	M an..17	**M**		
1131	Code list identification code	C an..17	**O**		
3055	Code list responsible agency code	C an..3	**D**		89 = Assigned by distributor 90 = Assigned by manufacturer 91 = Assigned by supplier or supplier's agent 92 = Assigned by buyer or buyer's agent
C108	TEXT LITERAL	C	**D**		This composite is only used if coded text can not be used.
4440	Free text value	M an..512	**M**		
4440	Free text value	C an..512	**O**		
4440	Free text value	C an..512	**O**		
4440	Free text value	C an..512	**O**		
4440	Free text value	C an..512	**O**		
3453	Language name code	C an..3	**D**		ISO 639 two alpha code This data element is only used when non coded free text has been provided in data element C108.
4447	Free text format code	C an..3	**N**		

Segment Notes:

This segment is used to specify any additional information required for the dangerous goods.
Use of this segment in free form is not recommended since it may inhibit automatic processing of the Transport Instruction. Coded references to standard texts is an available functionality which enables automatic processing and reduces transmission overheads. Standard texts should be mutually defined between trading partners and can be used to cover legal or other requirements.

Example:
FTX+AAD+++DIETHYL ACETALDEHYDE'

5. Segments Layout

Segment number: 60

SG18	- C	999 -	GID-HAN-TMP-RNG-LOC-MOA-PIA-FTX-SG19-GDS-SG20-SG21-SG22-SG23-SG24-SG29-SG32
SG32	- C	99 -	DGS-FTX-SG33-SG34
SG33	- C	9 -	CTA-COM
CTA	- M	1 -	Contact information

Function:

To identify a person or a department to whom communication should be directed.

		EDIFACT	GS1	*	Description
3139	Contact function code	C an..3	**R**		HE = Emergency dangerous goods contact HG = Dangerous goods contact
C056	DEPARTMENT OR EMPLOYEE DETAILS	C	**O**		
3413	Department or employee name code	C an..17	**O**		
3412	Department or employee name	C an..35	**O**		

Segment Notes:

This segment is used to specify a contact name relating to the dangerous goods identified in the DGS segment.

Example:
CTA+HG+:J REEVES'

5. Segments Layout

Segment number: 61

SG18	- C	999 -	GID-HAN-TMP-RNG-LOC-MOA-PIA-FTX-SG19-GDS-SG20-SG21-SG22-SG23-SG24-SG29-SG32
SG32	- C	99 -	DGS-FTX-SG33-SG34
SG33	- C	9 -	CTA-COM
COM	- C	9 -	Communication contact

Function:

To identify a communication number of a department or a person to whom communication should be directed.

		EDIFACT	GS1	*	Description
C076	COMMUNICATION CONTACT	M	**M**		
3148	Communication address identifier	M an..512	**M**		
3155	Communication address code qualifier	M an..3	**M**		AO = Uniform Resource Location (URL) EM = Electronic mail TE = Telephone

Segment Notes:

This segment identifies the communications number and type of communications for the person or department identified in the previous CTA segment.

Example:
COM+0033148759632:TE'

5. Segments Layout

Segment number: 62

SG18	- C	999 -	GID-HAN-TMP-RNG-LOC-MOA-PIA-FTX-SG19-GDS-SG20-SG21-SG22-SG23-SG24-SG29-SG32
SG32	- C	99 -	DGS-FTX-SG33-SG34
SG34	- C	9 -	MEA-EQN
MEA	- M	1 -	Measurements

Function:

To specify physical measurements, including dimension tolerances, weights and counts.

		EDIFACT	GS1	*	Description
6311	Measurement purpose code qualifier	M an..3	**M**		AAE = Measurement
C502	MEASUREMENT DETAILS	C	**A**		
6313	Measured attribute code	C an..3	**A**		AAW = Gross volume G = Gross weight
6321	Measurement significance code	C an..3	**O**		3 = Approximately 4 = Equal to
6155	Non-discrete measurement name code	C an..17	**N**		
6154	Non-discrete measurement name	C an..70	**N**		
C174	VALUE/RANGE	C	**R**		
6411	Measurement unit code	M an..3	**M**		
6314	Measurement value	C an..18	**O**		
6162	Range minimum value	C n..18	**O**		
6152	Range maximum value	C n..18	**O**		
6432	Significant digits quantity	C n..2	**O**		
7383	Surface or layer code	C an..3	**N**		

Segment Notes:

This segment is used to indicate a measurement of the dangerous goods in the goods line item.

Example:
MEA+AAE+AAW:4+LTR:500'

5. Segments Layout

Segment number: 63

SG18	- C	999 -	GID-HAN-TMP-RNG-LOC-MOA-PIA-FTX-SG19-GDS-SG20-SG21-SG22-SG23-SG24-SG29-SG32
SG32	- C	99 -	DGS-FTX-SG33-SG34
SG34	- C	9 -	MEA-EQN
EQN	- C	1 -	Number of units

Function:

To specify the number of units.

		EDIFACT	GS1	*	Description
C523	NUMBER OF UNIT DETAILS	M	**M**		
6350	Units quantity	C n..15	**R**		
6353	Unit type code qualifier	C an..3	**O**		2 = Transportable unit

Segment Notes:

This segment is used to indicate the number of units to which the dangerous goods measurements apply.

Example:
EQN+1:2'

5. Segments Layout

Segment number: 64

SG37	- C	999 -	EQD-EQN-MEA-DIM-SEL-SG39
EQD	- M	1 -	Equipment details

Function:

To identify a unit of equipment.

		EDIFACT	GS1	*	Description
8053	Equipment type code qualifier	M an..3	**M**		BPN = Box pallet non exchangeable CN = Container EFP = Exchangeable EUR flat pallet PA = Pallet UL = ULD (Unit load device)
C237	EQUIPMENT IDENTIFICATION	C	**R**		
8260	Equipment identifier	C an..17	**O**		The positioning of goods items within equipment in a consignment is controlled through a link with the SGP segment using the DE 8260. DE 8260 in the EQD segment should have the same value as that specified in the SGP segment (DE 8260) in the applicable goods item group to establish the link.
1131	Code list identification code	C an..17	**O**		
3055	Code list responsible agency code	C an..3	**D**		9 = GS1
3207	Country name code	C an..3	**O**		
C224	EQUIPMENT SIZE AND TYPE	C	**O**		
8155	Equipment size and type description code	C an..10	**O**		6 = Pressurized tank 21 = Container IC 20 ft.
1131	Code list identification code	C an..17	**O**		
3055	Code list responsible agency code	C an..3	**D**		
8154	Equipment size and type description	C an..35	**O**		
8077	Equipment supplier code	C an..3	**O**		1 = Shipper supplied 2 = Carrier supplied
8249	Equipment status code	C an..3	**O**		
8169	Full or empty indicator code	C an..3	**O**		4 = Empty 5 = Full

Segment Notes:

This segment is used to indicate the units of equipment which will be used to transport the goods items.

Example:
EQD+UL+45223'

5. Segments Layout

Segment number: 65

SG37	- C	999	-	EQD-EQN-MEA-DIM-SEL-SG39
EQN	- C	1	-	Number of units

Function:

To specify the number of units.

		EDIFACT	GS1	*	Description
C523	NUMBER OF UNIT DETAILS	M	**M**		
6350	Units quantity	C n..15	**R**		
6353	Unit type code qualifier	C an..3	**N**		

Segment Notes:

This segment is used to specify the number of pieces of equipment required.

Example:
EQN+10'

5. Segments Layout

Segment number: 66

SG37	- C	999 -	EQD-EQN-MEA-DIM-SEL-SG39
MEA	- C	9 -	Measurements

Function:

To specify physical measurements, including dimension tolerances, weights and counts.

		EDIFACT	GS1	*	Description
6311	Measurement purpose code qualifier	M an..3	**M**		AAE = Measurement
C502	MEASUREMENT DETAILS	C	**A**		
6313	Measured attribute code	C an..3	**A**		G = Gross weight T = Tare weight
6321	Measurement significance code	C an..3	**O**		3 = Approximately 4 = Equal to
6155	Non-discrete measurement name code	C an..17	**O**		
6154	Non-discrete measurement name	C an..70	**N**		
C174	VALUE/RANGE	C	**R**		
6411	Measurement unit code	M an..3	**M**		
6314	Measurement value	C an..18	**O**		
6162	Range minimum value	C n..18	**O**		
6152	Range maximum value	C n..18	**O**		
6432	Significant digits quantity	C n..2	**O**		
7383	Surface or layer code	C an..3	**N**		

Segment Notes:

This segment is used to specify the physical dimensions including tolerances of the equipment identified in the preceding EQD segment.

Example:
MEA+AAE+G+TNE:5622'

5. Segments Layout

Segment number: 67

SG37	- C	999	-	EQD-EQN-MEA-DIM-SEL-SG39
DIM	- C	9	-	Dimensions

Function:
To specify dimensions.

		EDIFACT	GS1	*	Description
6145	Dimension type code qualifier	M an..3	**M**		1 = Gross dimensions
C211	DIMENSIONS	M	**M**		
6411	Measurement unit code	M an..3	**M**		
6168	Length dimension value	C n..15	**O**		
6140	Width dimension value	C n..15	**O**		
6008	Height dimension value	C n..15	**O**		

Segment Notes:
This segment is used to indicate the dimensions of the equipment identified in the EQD segment.

Example:
DIM+1+MTR:2:2:1'

5. Segments Layout

Segment number: 68

SG37	- C	999	-	EQD-EQN-MEA-DIM-SEL-SG39
SEL	- C	99	-	Seal number

Function:

To specify the seal number or a range of seal numbers.

		EDIFACT	GS1	*	Description
9308	Seal identifier	C an..35	**R**		
C215	SEAL ISSUER	C	**R**		
9303	Sealing party name code	C an..3	**R**		CA = Carrier CU = Customs SH = Shipper
1131	Code list identification code	C an..17	**O**		
3055	Code list responsible agency code	C an..3	**D**		
9302	Sealing party name	C an..35	**O**		
4517	Seal condition code	C an..3	**O**		
C208	IDENTITY NUMBER RANGE	C	**N**		
7402	Object identifier	M an..35			
7402	Object identifier	C an..35			

Segment Notes:

This segment is used to specify a seal number for the equipment identified in the EQD segment.

Example:
SEL+96753+SH'

Dependency Notes:
The use of the SEL segment in the segment group 37 is recommended. Only if customs seals are involved in particular transport environments such as bonded goods the SEL segment in the segment group 4 should be used.

5. Segments Layout

Segment number: 69

SG37	- C	999	-	EQD-EQN-MEA-DIM-SEL-SG39
SG39	- C	9	-	NAD-DTM
NAD	- M	1	-	Name and address

Function:

To specify the name/address and their related function, either by C082 only and/or unstructured by C058 or structured by C080 thru 3207.

		EDIFACT	GS1	*	Description
3035	Party function code qualifier	M an..3	**M**		CK = Empty equipment despatch party CR = Empty equipment return party
C082	PARTY IDENTIFICATION DETAILS	C	**A**		
3039	Party identifier	M an..35	**M**		For identification of parties it is recommended to use GLN - Format n13.
1131	Code list identification code	C an..17	**N**		
3055	Code list responsible agency code	C an..3	**R**	*	9 = GS1
C058	NAME AND ADDRESS	C	**O**		This composite may only be used to fulfill the requirements of directive 2003/58/EC, article 4.
3124	Name and address description	M an..35	**M**		
3124	Name and address description	C an..35	**O**		
3124	Name and address description	C an..35	**O**		
3124	Name and address description	C an..35	**O**		
3124	Name and address description	C an..35	**O**		
C080	PARTY NAME	C	**D**		
3036	Party name	M an..35	**M**		Party Name in clear text.
3036	Party name	C an..35	**O**		
3036	Party name	C an..35	**O**		
3036	Party name	C an..35	**O**		
3036	Party name	C an..35	**O**		
3045	Party name format code	C an..3	**O**		
C059	STREET	C	**D**		
3042	Street and number or post office box identifier	M an..35	**M**		Building Name/Number and Street
3042	Street and number or post office box identifier	C an..35	**O**		Name and/or P.O. Box
3042	Street and number or post office box identifier	C an..35	**O**		
3042	Street and number or post office box identifier	C an..35	**O**		
3164	City name	C an..35	**D**		City/Town, clear text.
C819	COUNTRY SUB-ENTITY DETAILS	C	**D**		
3229	Country sub-entity name code	C an..9	**O**		
1131	Code list identification code	C an..17	**O**		
	Code list responsible agency				

5. Segments Layout

Segment number: 69

		EDIFACT	GS1	*	Description
3055	code	C an..3	**O**		
3228	Country sub-entity name	C an..70	**O**		County/State, clear text.
3251	Postal identification code	C an..17	**D**		Postal Code
3207	Country name code	C an..3	**D**		ISO 3166 two alpha code

Segment Notes:

This segment is used to specify pick up or drop off parties for the equipment specified in the EQD segment.

Example:
NAD+CK+3323456007890::9'

Dependency Notes:
The following composites and data elements are only used when a coded name and address can not be used.
The affected composites and data elements are as follows:
C080 - C059 - 3164 - C819 - 3251 - 3207

5. Segments Layout

Segment number: 70

SG37	- C	999	-	EQD-EQN-MEA-DIM-SEL-SG39
SG39	- C	9	-	NAD-DTM
DTM	- C	1	-	Date/time/period

Function:

To specify date, and/or time, or period.

		EDIFACT	GS1	*	Description
C507	DATE/TIME/PERIOD	M	**M**		
2005	Date or time or period function code qualifier	M an..3	**M**		54E = Stuffing date/time (GS1 Temporary Code) 55E = Un-stuffing date/time (GS1 Temporary Code)
2380	Date or time or period value	C an..35	**R**		
2379	Date or time or period format code	C an..3	**R**		102 = CCYYMMDD 203 = CCYYMMDDHHMM 718 = CCYYMMDD-CCYYMMDD

Segment Notes:

This segment is used to provide dates related to the equipment specified in the EQD segment.

Example:
DTM+54E:20020101:102'

5. Segments Layout

Segment number: 71

UNT - M 1 - Message trailer					
Function: To end and check the completeness of a message.					
		EDIFACT	GS1	*	Description
0074	Number of segments in the message	M n..6	**M**		The total number of segments in the message is detailed here.
0062	Message reference number	M an..14	**M**		The message reference number detailed here should equal the one specified in the UNH segment.
Segment Notes: This segment is a mandatory UN/EDIFACT segment. It must always be the last segment in the message. Example: UNT+72+ME000001'					

5. Segments Layout

Segment number: 72

UNZ - M 1 - Interchange trailer					
Function: To end and check the completeness of an interchange.					
		EDIFACT	GS1	*	Description
0036	Interchange control count	M n..6	**M**		Number of messages or functional groups within an interchange.
0020	Interchange control reference	M an..14	**M**		Identical to DE 0020 in UNB segment.
Segment Notes: This segment is used to provide the trailer of an interchange. UNZ+5+12345555' DE 0036: If functional groups are used, this is the number of functional groups within the interchange. If functional groups are not used, this is the number of messages within the interchange.					

6. Examples

The following is an example of a transport instruction messages from a consignor identified by GLN 5412345123453 to a carrier identified with GLN 5411234512309. The consignee (party to receive the goods) is identified with GLN 5411234444402.

The transport instruction is allocated the number 569952 and is dated the 1st of March 2002 . The consignor is requesting the transportation of one returnable pallet by road which contains 14 packages which have a consignor issued reference number of TI1284. The place of departure is identified by GLN 5412345678908. The transport line item, which must be transported within a temperature range of -5 to plus 5 degrees Celsius, has a declared value of the transport line item is 45000 Euros.

GTIN for the packages being transported is identified as 5410738377117 and the serial shipping container code for the pallet containing the packages is identified using the EAN.UCC serial shipping container code 354123450000000014. The delivery party is identified with GLN 5412345145660.

UNH+ME000001+IFTMIN:D:01B:UN:EAN004'	Message header
BGM+610+569952+9'	Transport instruction number
DTM+137:20020301:102'	Message date/time 1st March 2002
DTM+2:200203081100:203'	Delivery date/time requested, 8th March 2002 at 11:00
CNT+11:1'	Total number of packages 1
RFF+CU:TI1284'	Consignor’s reference number TI1284
TDT+20++30+31'	Details of transport, by truck
DTM+133:200203051100:203'	Estimated departure of truck 5th March 2002 at 11am
LOC+9+5412345678908::9'	Place of truck loading identified with GLN 5412345678908
NAD+CZ+5412345123453::9'	Consignor identified with GLN 5412345123453
NAD+CA+5411234512309::9'	Carrier identified with GLN 5411234512309
NAD+CN+5411234444402::9'	Consignee identified with GLN 5411234444402
NAD+DP+5412345145660::9'	Delivery party identified with GLN 5412345145660
GID+1+1:09::9+14:PK'	First occurrence of goods in one returnable pallet with 14 packages
HAN+EAT::9'	The goods are foods stuffs
TMP+2+000:CEL'	Transport temperature 0 degrees Celsius
RNG+5+CEL:-5:5'	The range of temperature must be between –5 and 5 degrees Celsius
MOA+44:45000:EUR'	Declared valued of the carriage 45.000 EUR
PIA+5+5410738377117:SRV'	Product identification of the goods using GTIN 5410738377117
MEA+AAE+X7E+KGM:250’	Gross weight of returnable pallet plus 14 packages on the pallet is 250 Kilograms
PCI+33E'	Marked with the EAN.UCC serial shipping container code

6. Examples

GIN+BJ+354123450000000014’	Identification of marked serial shipping container code
UNT+23+ME000001'	Total number of segments in the message equals 23

Note :
The EDI interchange will include the UNB..UNZ segments and, if applicable, the UNG..UNE segments. (See part 1 section 5.7).